NO. 23 NOTES FROM THE SHOP $2.50

Woodsmith®

LATHE TURNING: STEP-BY-STEP TO TURNING GOBLETS
BENCH PLANES: HOW TO USE THEM TO PLANE A TABLE TOP
MICROWAVE CART: A VERSATILE SERVING CART

CONTEMPORARY
Trestle Table

Woodsmith

Number 23 September, 1982

Editor
Donald B. Peschke

Design Director
Ted Kralicek

Art Director
Jon Snyder

Assistant Editor
Steve Krohmer

Graphic Designers
David Kreyling
Marcia Simmons

Subscription Manager
Sandy J. Baum

Subscription Assistants
Christel Miner
Vicky Robinson
Kim Melton
Jackie Stroud
Shirley Renz

Computer Operations
Ken Miner

Administrative Assistant
Cheryl Scott

ISSN: 0164-4114

WOODSMITH is published bimonthly (January, March, May, July, September, November) by Woodsmith Publishing Company, 1912 Grand Ave., Des Moines, Iowa 50309.
WOODSMITH is a registered trademark of the Woodsmith Publishing Company.
©**Copyright 1982** by Woodsmith Publishing Company. All Rights Reserved.
Subscriptions: One year (6 issues) $10, Two years (12 issues) $18. Single copy price, $2.50 (Canada and Foreign: add $2 per year.)
Change Of Address: Please be sure to include both your old and new address for change of address. Mail to: Woodsmith, 1912 Grand Ave., Des Moines, Iowa 50309.
Second class postage paid at Des Moines, Iowa.
Postmaster: Send change of address notice, Form 3579, to Woodsmith Publishing Co., 1912 Grand Ave., Des Moines, Iowa 50309.

BACK ISSUES

A list of the contents of all back issues appears on the wrapper of this issue. If the wrapper is missing, you can send for a booklet describing the contents and prices of all back issues.

SAMPLE COPIES

If you have a friend who would like to see a copy of **Woodsmith**, just send the name and address, and we'll send a sample (at no cost).

Sawdust

ABOUT THIS ISSUE. Whenever we get visitors here at *Woodsmith*, one question that always seems to come up is, "How do you decide what projects to build for each issue?"

What we usually do is try to decide on a technique before we ever get to the projects. For this issue, we thought it was time to do an article on using bench planes. That naturally led to using a plane to smooth a table top. Which in turn led to the Trestle Table.

At least that's the story I'd like to tell. What really happened is that everybody kept teasing me about the original design of the Trestle Table shown in the first issue of *Woodsmith*. I'll admit that first table is not the greatest design in the world. And it has some construction faults (which is why we're no longer offering Issue No. 1 with the other Back Issues).

But I finally got tired of all this harassment and said okay, if Ted can design a new one, we'll build it and use it as a lunch table here at work.

Now the pressure was on. First, we had to design a table to meet the approval of everyone in this crazy bunch. (Ted said, "No problem.") And if we were going to sit at this table for lunch everyday, it also meant that the top had to be flawless. (I couldn't live with another four years of harassment.)

Needless to say, I spent a little extra time getting the planes adjusted and sharpened. It paid off. The table top is flat and smooth. And it was all done by hand. Now everytime I walk by this table and run my fingers across it, I feel entitled to a little grin of accomplishment.

Yet, I didn't always feel this way about using hand planes. In fact, my initial reaction to a hand plane was, "How in the world do you get this thing to work?"

My first plane was an inexpensive (cheap) smooth plane, a Christmas gift, given to me (I was sure) to test my patience and drive me up the wall.

Of course, when I first took it out of the box, I was delighted. There were instant visions of an old-time woodworking shop . . . paper-thin shavings scattered over the floor; hand-planing exotic hardwoods to reveal beautiful grain; and the peaceful solitude of woodworking done the old-fahioned way.

But as soon as I tried to use it, my dream was shattered. I quickly came to realize that a plane is just an expensive piece of iron that doesn't work. The dumb thing hops and chatters all over the wood, it tears out sections that have to be sanded smooth later, it's impossible to adjust, and it ruins good wood. In general, it causes more frustration than it's worth.

It took some time, but I eventually learned how to conquer this tool. Now, one of my favorite pastimes is to head back to the shop and fill the floor with all those paper-thin shavings I first dreamed of.

There are times, of course, when I'm not off on one of these romantic flings. There's work to be done — like smooth the top of a Trestle Table. Then that once-dreaded hand plane becomes an invaluable tool.

What kind of plane would you recommend for someone just starting out?

I think the best plane is the one that gets the most use. In our shop that means a *Record* "05" jack plane with a corrugated bottom. This one plane has smoothed almost every table top, cabinet side and panel shown in *Woodsmith*. (This plane is available through several catalogs, but the one with the best price ($49) is Garrett Wade, catalog $3, 161 Avenue of the Americas, New York, NY 10013.)

Although the Record jack plane is a real workhorse, one of my favorite planes to work with is a Primus Reform-Type smooth plane. This is a wooden-bodied plane that feels good in your hands, and has one of the best depth-adjusting systems of any plane made. (It's also available from Garrett Wade for $99.)

NEW FACES. Lately it seems when I'm not back in the shop working with planes, I'm trying to lower the unemployment rate. Shirley Renz has signed on to help enter new subscriptions and back issue orders.

Since Shirley is the "new kid on the block," everyone here agrees that if there are any problems whatsoever with any order, it must be Shirley's fault. (Just kidding, she's doing a terrific job.)

IT'S A BOY. As of 5:30 AM on the day I'm writing this, Steve (our assistant editor) and his wife Janet have just added a new face of their own: Baby Boy (no name yet) Krohmer, 7 lbs., 1 oz. Congratulations.

Steve turned the two goblets shown in this issue (he calls them *Wood*erford crystal). It won't be long before both Steve and Ted start dreaming up all sorts of plans and projects for children's furniture. (Ted and Mindy's baby girl, Katie, just took her first steps today. She'll be one year young on Thanksgiving day.)

THE SCHEDULE. We are still trying to get back on our intended schedule for mailing issues of *Woodsmith*. We're making progress, but the next issue (Number 24) will still be a little late. We hope to have it in the mail during the first week in December.

Tips & Techniques

OUCHLESS KNOBS

In your article on comparing router dovetail fixtures (*Woodsmith* No.22), you mentioned that the knobs on the *Sears* fixture gave you sore fingers. I eliminated that problem on my *Sears* dovetail fixture

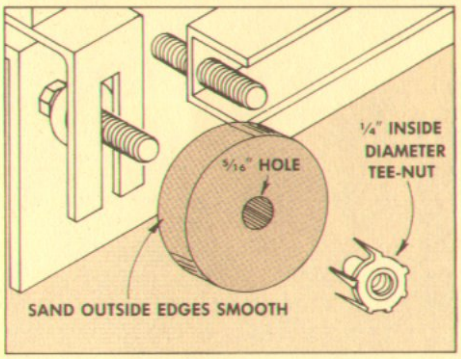

a long time ago. All I did was to replace the knobs with a shop-built hand wheel.

First, I use a holesaw to drill a 2" diameter (really any size will work) "plug" out of a piece of ½" poplar. Although this produces a perfect circle, the outside edge is too rough to be used as a handwheel.

To smooth the outside diameter of the "plug", I insert a ¼"-20 bolt through the ¼" hole left by the holesaw, and attach a nut to secure it on the bolt. Then I chuck the "plug" in a drill press (a lathe or even an electric drill will also work), and round the edges so that they're smooth.

Finally, I enlarge the hole to 5/16", and insert a ¼" inside diameter tee-nut. Simply be sure the tee-nut is on the outside face of the handwheel so that the tighter you turn the handwheel, the tighter the tee-nut seats itself.

Jules Fritts
Easton, Pennsylvania

DUPLICATE CUTTINGS

I've always had trouble cutting duplicate parts on the band saw until I came across this easy solution. I sandwich a high quality double-faced tape between the duplicate parts being cut. The tape firmly holds the pieces together throughout the cutting process. It can also be left in place while sanding the pieces to ensure exact duplicates.

I always keep the tape within the pattern to prevent it from being smeared into the edges as the parts are being sanded.

Before the pieces are finished, be sure to sand off any of the glue residue left on the surface by the tape.

Carl R. Mascia
Greensburg, Pennsylvania

BENCH HOLD-DOWN

I have a suggestion for wood-butchers like myself that need a hold-down jig for large or awkward-sized boards.

I purchase a sheet of sandpaper that's used for sanding hardwood floors, and glue it on the surface of my workbench. I usually use a piece of 80-grit sandpaper that's 8" wide x 22" long. The rough surface 80-grit sandpaper will hold almost any workpiece steady while dadoing or planing.

Thomas M. Olsen
Pflugerville, Texas

90° BEVELS ON THE TABLE SAW

Whenever I'm setting the saw blade at 90° on the table saw, I've found that it's more accurate to use the arbor flange rather than the saw blade as the reference point.

First, I remove the saw blade from the arbor. Then I use a straight-edge held against the arbor flange, extending about

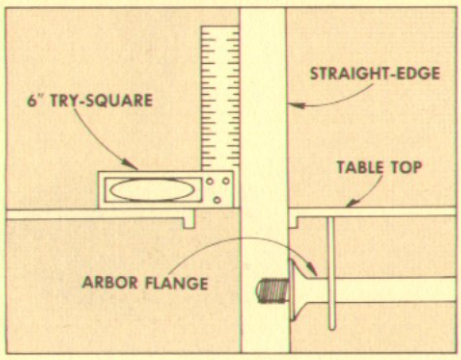

6" above the saw table surface, to check the vertical alignment against a 6" try-square. Even the slightest variation from 90° will show up when using the full length of the try-square for reference.

Richard Barron
Jackson, Mississippi

THE ABRASIVE MITER

In *Woodsmith* No. 21, the article on cutting miters mentioned that the wood tends to creep as it's being cut.

What I do to overcome this is to glue a piece of medium sandpaper to the plywood fence on the miter gauge or cut off jig. The sandpaper grips the piece being cut just enough to keep it from being pulled into the blade.

Adjusting the position of the piece (against the sandpaper) takes a little getting used to, but otherwise, it works well.

Don Klett
Portland, Oregon

STARTING A DOVETAIL

After reading about hand-cut dovetails in *Woodsmith* No. 19, I thought I'd share a tip that I use when starting a dovetail cut. I've found that when I try to start a saw-cut, it's helpful to cut a small channel next

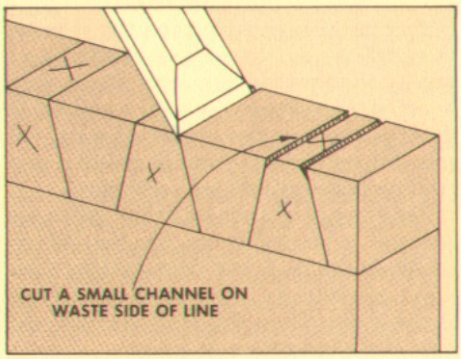

to the scribed line. The channel keeps the saw from wandering until it can follow its own kerf.

I use a small chisel to cut the channel, keeping all but the very edge on the waste side of the scribed line.

Stan Spence
Monrovia, California

REPAIRING ROUND TENONS

I'm in the furniture repair business, and have come across a little idea I'd like to pass on to your readers.

On chairs that have been repaired repeatedly, the round tenons have usually been cleaned up so many times that they're smaller than they were originally. To build up their diameters again, I take a curled shaving from a hand plane and glue it around the undersized tenon.

Hold the shaving in place with masking tape until the glue cures, then rasp the tenon down to a correct fit.

The shaving works well because it has a natural curl that wraps-around the round tenons. This works far better for me than trying to use a veneer for shimming.

Robert G. Peterson
Knoxville, Illinois

SEND IN YOUR IDEAS

If you'd like to share a woodworking tip with other readers of *Woodsmith*, send your idea to: *Woodsmith*, Tips & Techniques, 1912 Grand Ave., Des Moines, Iowa 50309.

We pay a minimum of $10 for tips, and $15 or more for special techniques (that are accepted for publication). Please give a complete explanation of your idea. If a sketch is needed, send it along; we'll draw a new one.

Turning A Goblet

OR, TURNING TO DRINK

When we decided to do an article on turning a goblet, I turned a few examples and asked Don which one he liked. Predictably, he liked them all.

This created somewhat of a problem. I figured we'd have to expand the issue to about 200 pages to squeeze in everything I wanted to show. But for some reason, Don rejected that idea. So instead, I decided to show how to turn two goblets that are not only different in appearance, but that also require different turning techniques.

The two goblets shown in the photo are different in several ways. The bowl of the goblet on the right has very straight sides that taper in from the rim all the way down to the stem. Then the bowl is separated from the stem with a V-groove.

The bowl of the second goblet tapers out (just slightly) from the rim to the "waist" of the bowl. Then the bowl forms a gentle curve that flows directly into the stem and all the way to the base without interruption.

Even with their differences, both goblets are similar in the sense that they're turned from a fairly large block of wood.

LAMINATING THE BLANK

The first step is to get a block of wood large enough to turn the goblet. I used blocks 4" square, 9" long to turn both goblets: cherry for the goblet on the right, and Don's personal stock of koa (which about cost me my job) for the goblet on the left.

To get this size block, I laminated five pieces of 4/4 (13/16") lumber face to face. This brings up the subject of glue. If the goblet is going to be used as a functional piece, a true water-proof glue (penol-resorcinol or epoxy are the two most common kinds) must be used.

I decided to use a two-part epoxy called *Chem Tech T-88*, because it has some major advantages over penol-resorcinol glues. First, it will cure at temperatures down to 40°, a big advantage if your shop is in the basement or the garage. Second, it doesn't require high clamping pressure as most penol-resorcinol glues do. And third, it leaves a clear glue line. (The glue line from penol-resorcinol glues is usually dark.

SOURCES. *Chem Tech T-88* is available from Chem Tech, 4669 Lander Road, Chagrin Falls, OH 44022. All orders for T-88 are shipped C.O.D., via *United Parcel Service*. T-88 costs $9.63 per pint.

TURNING SQUARES. There is one other option. A solid turning square can be used, if you can get one big enough. Large turn-

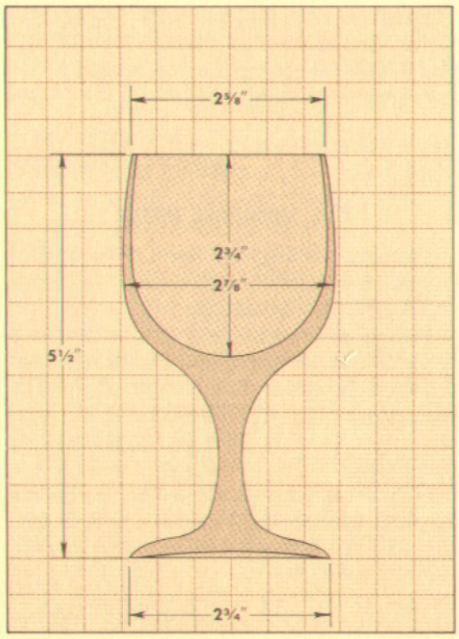

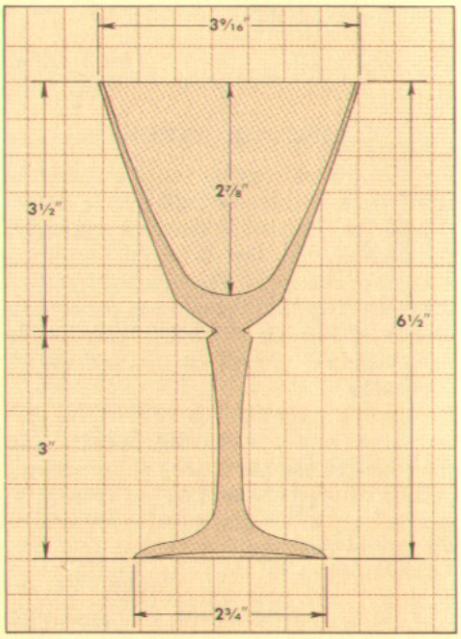

ing squares (either 3"x3" or 4"x4") can be ordered from: *Constantine*, 2050 Eastchester Road, Bronx, NY 10461.

MOUNTING THE BLANK

Once you have the right size blank for the job, the next step is to decide how to mount it to the faceplate. There seem to be as many different mounting methods as there are turners. But the thing to remember is that the sole purpose of any mounting system is to hold the blank securely in place.

In *Woodsmith* No. 20, I glued the fruit bowl directly to a piece of plywood mounted to the faceplate. This system worked fine because the long grain of the bowl blank was being glued to the plywood.

The goblet blank is a different story. Because the end-grain of the goblet blank must be glued to the plywood, it just doesn't produce a strong enough joint.

The best way I've found to secure a goblet blank to the faceplate is the method mentioned in Dale Nish's book, *Creative Woodturning*. This method calls for turning a round tenon on the end of the goblet blank. Then the tenon is glued into a hole that's been drilled in a plywood disc, which in turn, is screwed to a faceplate, see Fig. A.

To mount the goblets, I started by bandsawing a 5"-diameter disc from a piece of ¾" plywood. Then I screwed the plywood disc to a 3"-diameter faceplate, and turned the outside edge true with the lathe.

After the disc is turned true, the next step is to drill a 1" hole, ⅝" deep in the center of the plywood disc. A forstner bit is really the best bit to use to drill this hole, but if you're like me, these bits are just too expensive for as seldom as they're used. Instead of the forstner bit, I just used a 1" spade bit with the center point ground down to about ⅛".

TURNING THE TENON. Next, the blank is mounted between centers, and turned true using the ⅜" gouge. Then I use a parting tool to cut a round tenon that fits snugly in the hole of the plywood disc. The length of this tenon should be about 1/32" shorter than the depth of the hole to ensure that the bottom of the turning blank sits directly on the plywood disc.

Apply glue to both the tenon and the bottom of the blank, and mount it to the plywood disc. Then I use the tail stock of the lathe to clamp it in place.

During the clamping process, the blank usually shifts slightly out of true. So after letting it dry overnight, I turn the blank true with the lathe once again.

HOLLOWING OUT THE GOBLET BOWL

Now it's time to start on the inside of the goblet bowl. I think it's best to turn the inside of the bowl before turning the outside profile, for a couple of reasons.

FIGURE A

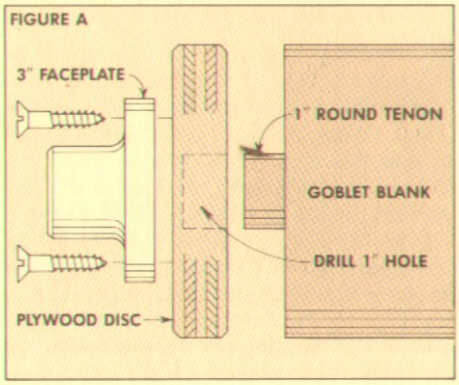

First, the process of hollowing out the inside of the bowl isn't what I consider a gentle procedure. If the outside profile of the bowl were turned first, there just wouldn't be enough "meat" on the bowl to withstand the vibration caused by hollowing out the inside.

Second, it's a lot easier to turn the thin walls on the goblet's bowl by using the gentle cutting action of a skew (on the outside of the bowl), rather than trying to use a scraper on the inside of the bowl.

I start this process of hollowing out the inside of the bowl by drilling a hole as close to the finish diameter as possible. Unfortunately, the cost of a bit anywhere near the diameter of these goblets costs about as much as the lathe itself. So rather than going broke, I just use an inexpensive 1" spade bit. (My wife calls this being cheap; I just tell her it's the result of a thorough cost-effective analysis.)

DRILLING THE HOLE. Before drilling the hole, I wrap a piece of masking tape on the bit to mark the depth of cut — about ⅛" shorter than the inside depth of the bowl. Note: Be sure to include the length of the center point of the bit.

After the depth of cut is marked, insert the bit (and a chuck) in the tail stock of the lathe, see Fig. 1. Then turn on the lathe (at the slowest speed), and use the tail stock crank wheel to advance the bit into the goblet blank. Periodically clean out the shavings to help keep the bit cool.

ENLARGING THE HOLE. To enlarge this initial hole, some turners like to use a parting tool or a round-nose scraper. I've found that it's both faster and cleaner to use a square-nosed scraper. The problem with this method is that most standard turning sets don't include a square-nose scraper. But they do have a diamond point scraper (which I rarely use anyway), so I regrind it to a square-nose profile.

Before I begin to enlarge the hole, I mark the diameter of the finished goblet on the end of the blank. This keeps me from going too far during all of the excitement.

Then I position the tool rest at dead center, and use the square-nose chisel to make very light cuts into the side of the hole — penetrating only about ½" deep with each cut, see Fig. 2. (The width of each cut is actually determined by the amount of vibration that's created.) There will be some vibration no matter how light the cuts are, but it shouldn't be excessive.

I continue to make ½" cuts, from the hole outward, until the width of the enlarged hole is within ⅛" of the finished size of the goblet. Then I start at the center again, and deepen the hole with another series of ½"-deep cuts.

For the straight-sided bowl, I stair-step each new row of ½"-deep cuts. For the curved sided bowl, I keep the sides straight until I'm about ½" from the bottom. Then I stair-step the last couple of rows, see Fig. 3.

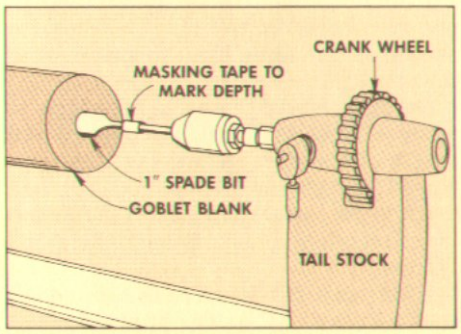

1 *First, mark the depth of cut on the bit with a piece of masking tape. Then slowly advance the bit, stopping the lathe often to clean out the waste.*

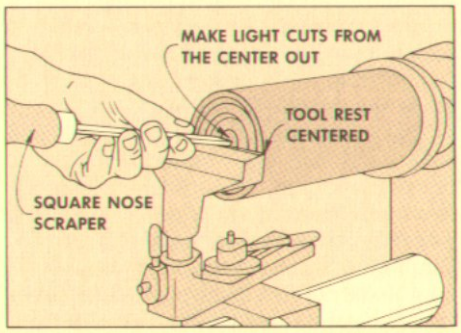

2 *Using the square-nose scraper, make rows of light cuts that are ½" deep. Start each row at the hole, and proceed to within ⅛" of the finished diameter.*

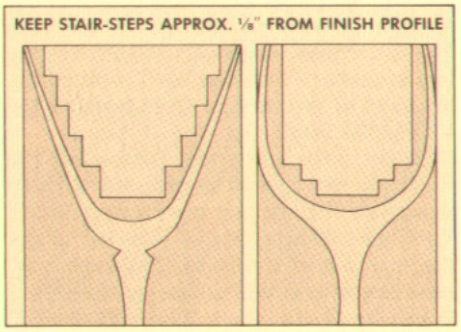

3 *For the straight-sided goblet, stair-step each new row of ½" deep cuts to keep within the profile. For the curved goblet, only stair-step the last few rows.*

STRAIGHT-SIDED GOBLET

After removing the majority of the waste, the next step is to shape the inside of the bowl. For the straight-sided bowl, I used a square-nose scraper to remove the corners of the stair-steps, see Fig. 4. As the corners are slowly wittled away, keep the angle of the tool parallel with the angle of the finished side, even during the initial cuts. And to really obtain the best finish, it's best to take only very light passes.

One of the best ways I've found to avoid cutting out too much material in one spot is to stop the lathe often and check the progress with my finger. It's amazing how your finger can detect any variations.

After the sides of the goblet are cleaned up, and are at the correct angle, I switch from the square-nose scraper to a round-nose scraper to form the bottom of the bowl. Be sure to remove enough material here to eliminate the hole left by the center point of the spade bit.

Cleaning up and shaping the bottom of the bowl is a slow process. Proceed slowly, and sharpen the scraper often — it's the only way to get the bottom really clean.

Once the bottom is shaped, I sharpen the round-nose scraper one more time, and make a few very light cuts starting at the bottom of the bowl, moving completely out to the lip. These final light passes (with a freshly sharpened scraper) will smooth the surface to the point that it can be sanded.

CURVED-SIDED GOBLET

To form the inside of the curved-sided goblet, I use a round-nosed scraper (ground to an extreme fingernail shape). This scraper is used to remove the initial waste, and also for the final shaping.

The key thing here is to make very light cuts, starting at the bottom of the bowl and proceeding out to the rim. (You're actually forming the round bottom and the side walls at the same time). Resharpen the scraper frequently to get the best finish.

As the scraper progresses from the bottom to the sides of the bowl, the side of the tool will have a tendency to cut into the walls of the goblet unless the handle of the scraper is swung to the right, see Fig. 5. This movement keeps only the point of the tool in contact with the bowl, preventing the sides of the scraper from gouging the wall of the bowl.

As the bowl is shaped, I clean out the shavings, and check the progress with either a template or just my finger. (As I'm checking the progress, I blow all of the shavings out of the bowl. The only draw back to this practice is that by the time I finally leave the shop, I usually have 2 pounds of shavings clinging to my beard.)

When everything feels right, I sharpen the scraper and make a couple light passes to get the surface ready for sanding.

SANDING THE INSIDE

After the final passes with the round-nose scraper, both bowls will be ready for final sanding. I use a progressive series of four grits of sandpaper: 120, 150, 180, 220. (If the surface is in really poor condition, you could start with a 80-grit paper.)

Whenever sandpaper is used on the lathe, there's enough heat generated to burn your fingers in no time flat. I use a pad of steel wool behind the sandpaper to protect my fingers from the heat. The steel wool also evens out the pressure so you don't sand grooves in the surface.

After the inside is sanded, the next step is to shape the outside of the bowl.

THE OUTSIDE OF THE BOWL

Before doing any work on the outside of the goblet, I mark the finished (inside) depth of the bowl on the outside of the blank. (Whenever I think I'm good enough to skip this step, I always manage to cut the outside of the bowl too short, and wind up with the top two-thirds of it in my lap.)

Once the depth of the bowl is marked, I use a parting tool to cut a ½"-deep groove on the waste side (stem side) of the mark, see Fig. 6. Then I gradually widen this groove by rounding over the shoulder on the stem side to provide a little extra room as the bowl is formed.

SHAPING THE OUTSIDE. To shape the outside of the bowl, I use a ⅜" gouge, see Fig. 7. As the profile of the bowl progresses, the groove marking the depth of the bowl will have to be deepened occasionally. (I don't cut the groove to its full depth in order to keep the bowl as solid as possible until it's absolutely necessary to remove the waste.)

During the process of shaping the outside profile of the bowl, I work from the rim to *near* the bottom of the bowl. (The rest of the bottom is formed, when the top of the stem is shaped.) For me, this is the easiest way to be sure that the bowl and the stem flow together the way they're supposed to (forming a smooth transition on the curved-sided goblet, and a distinct separation on the straight-sided goblet).

FINAL SHAPING. As soon as the goblet is roughed out close to the finished profile, I switch from the ⅜" gouge to a 1" skew to finish the outside of the bowl.

This is probably the most difficult, and potentially the most disastrous part of turning a goblet. The problem is really two-fold. First, if the skew is not used correctly, there's always the danger of it digging-in. Second, even when the skew is used in the correct manner, it often leaves spiraled grooves on the surface of a thin-walled goblet.

The solution to keeping the skew from digging-in is to use only the leading half (the half nearest the leading point) to make the cut, see Fig. 8. If the trailing half comes in contact with the surface (for even a split second), it will dig in instantly.

Also, in the case of these goblets, if the cut is started on the very edge of the rim, the skew will dig in, possibly ruining the goblet. So I usually start the cut about ⅛" in from the edge of the rim.

Unfortunately, the solution to the second part of the problem (spiraled grooves) isn't as cut and dried. In fact, nobody seems to know exactly what causes them. (There are about as many theories for the cause of spiraled grooves as there are woodturners.) But one thing's for sure, whenever the walls of the goblet are very thin, these spiral gouges appear as if they were the ghosts of woodturners past.

There a couple of things that can be done to help eliminate this effect. First, and most important, is to keep the skew extremely sharp. (This alone will solve a lot of the problem.)

The second part of the solution has to do with technique. To help eliminate the spiraling effect, I support the inside of the bowl with my fingers, see Fig. 8. This keeps even pressure "behind" the cutting edge of the skew, helping to eliminate the "whipping" effect of the thin walls.

Unfortunately, this solution creates other problems. First, you have to be careful here, because the rim is sharp enough to cut like a knife.

Then, from a technique standpoint, you have to control the skew with only one hand. A tricky maneuver, at best. I've found that it helps to rest the handle of the skew against the side of my thigh as it's being used. This helps steady the tool just enough to make it a lot easier to control.

But in the end, the only real solution is to practice the cut often enough to become somewhat proficient.

After the final cuts are made with the skew, sand the outside of the goblet with the same grits that were used on the inside of the bowl.

SHAPING THE STEM

The next step is to remove some of the waste around the stem. Then the stem and the remainder of the bowl bottom are shaped at the same time to ensure they flow together correctly.

On both bowls I used a ⅜" gouge to remove most of the waste around the length of the stem. However, I only removed enough material to get the stem down to the same diameter as the remaining (unfinished) section of the bowl bottom.

After most of the waste is removed, I used a 1"skew on the straight-sided goblet to form both the bottom of the bowl and the top of the stem, see Fig. 9. (This is actually just a large V-groove cut between the bowl and the stem.)

For the round-sided bowl, I used the ⅜" gouge to shape the bottom of the bowl and the top of the stem into one continuous cove, see Fig. 10.

Then to finish the stem, I used a ⅜" gouge (on both goblets) to reduce the remaining thickness of the stem to just slightly larger than the finished size.

You're supposed to use a skew at this point to make the final passes on the stem. But there's not always enough room to maneuver a skew between the base and the bowl. So I take the easy way out (without feeling the least bit guilty) and use a gouge. However, in all honesty, if there's room, a skew is really the best way to clean up the stem.

THE BASE. The last step is to form the base. I use the ⅜" gouge to rough-out the diameter of the base about 1/16" larger than the finished size.

To finish the base, most of the profile can be formed with a 1" skew. (This cut is nothing more than a one-sided bead, see Fig. 11.) Then, I switch to the ⅜" gouge to get the base and stem to flow together.

Finally, I sand the entire lower half of the goblet with the same grits that were used before.

FINISHING. Just before I apply the finish to the goblet, I re-sand the entire surface (inside and out) with a piece of 220 grit sandpaper. However, for this final sanding, I turn off the lathe, and sand in the direction of the grain. This is about the only way to eliminate the circular scratch marks that always seem to show up after the finish is applied.

When the goblets are completely sanded, use the parting tool to remove the goblet from the faceplate, see Fig. 12. As the goblet is parted off, it helps to undercut the base slightly — making the bottom of the base slightly concave so it doesn't rock when placed on a flat surface.

If the goblets are actually going to be used to hold whatever refreshment you prefer, I finish them with Behlen's *Salad Bowl Finish*. This finish is safe for use with food, and is durable enough to withstand alcohol and detergents.

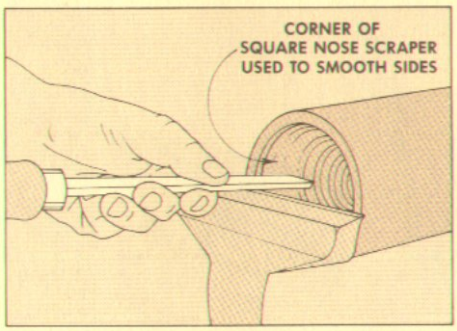

4 *The bowl of the straight-sided goblet is shaped using light cuts with the square-nose scraper, keeping the scraper parallel with the final profile.*

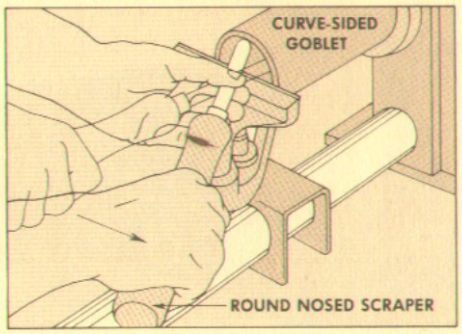

5 *To keep the side of the round-nose scraper from gouging the walls of the curved goblet, the handle is swung to the right as the tip begins cutting the walls.*

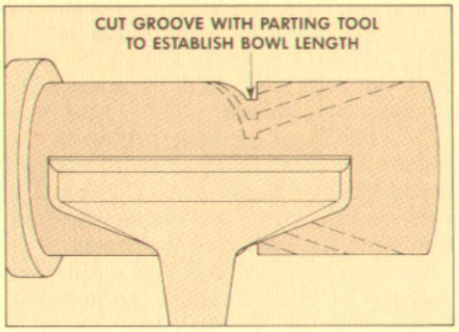

6 *To mark the length of the bowl, cut a ½"-deep groove using a parting tool. Then round over the shoulder on the waste side to provide room to shape the bowl.*

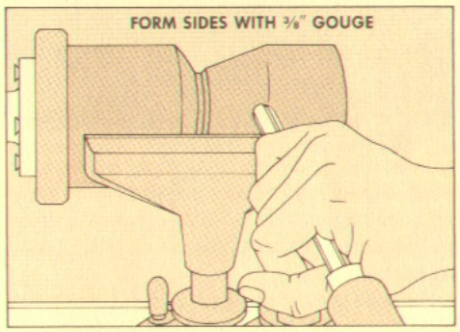

7 *The profile of the bowl is "roughed" out with a ⅜" gouge. As the profile progresses, the depth of the groove marking the length of the bowl is also deepened.*

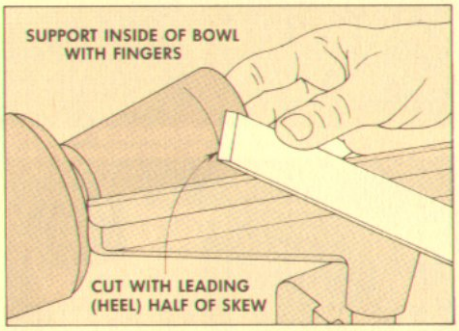

8 *A 1" skew is used to make the finish cuts on the bowl. On a thin-walled goblet, the inside of the bowl must be supported to keep the bowl from flexing.*

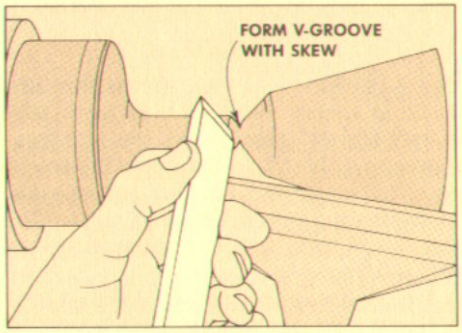

9 *On the straight-sided goblet, the top of the stem and the bottom of the bowl are formed at the same time by making a V-groove with the 1" skew.*

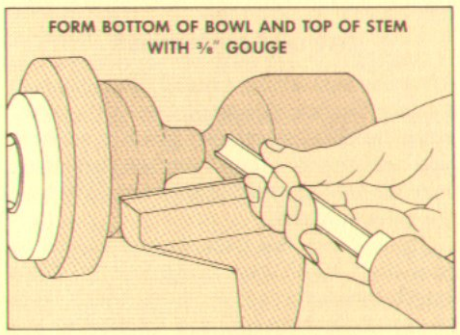

10 *On the round-sided goblet, the bottom of the bowl flows smoothly into the top of the stem. A ⅜" gouge is used to form this "cove" before the stem is shaped.*

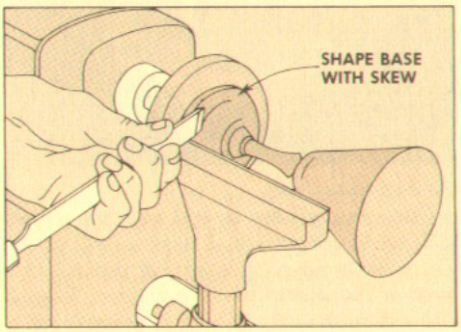

11 *Cut most of the base (forming a "half" bead) with a 1" skew. The remainder of the base is cut with the ⅜" gouge so it blends into the stem.*

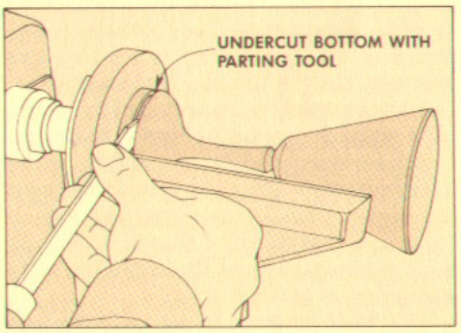

12 *Use a parting tool to remove the goblet from the faceplate. To keep the base from rocking on flat surfaces, undercut a concave surface on the bottom.*

Microwave/Serving Cart

A RADIANT DESIGN FOR COOKING OR SERVING

Microwave ovens are a hot item: Everybody wants one, but nobody knows where to put it. And if your kitchen is anything like mine, counter space is more valuable than ocean front property.

We decided the best solution to this problem was to build a roll-around microwave cart that could fit into almost any kitchen, and at the same time, be useful as an all-around utility or serving cart.

That solved the problem of where to put the microwave. But where do you put the plates, bowls, cookbooks and all the other little gadgets that seem to accumulate around a microwave oven?

To ease these storage problems, we added two leaves on the ends of the cart (instead of putting them on the front) in order to keep bowls and dishes out of the way when the oven door is opened.

Then we added a fixed shelf on the bottom, and an adjustable shelf in the middle for stashing all the other little gadgets. But the nicest thing about the cart is that it's relatively inexpensive and easy to build. I went about building the cart in three stages: first the legs, then the shelf frames, and finally the top and shelves.

THE LEGS

The legs (A) on the cart shown here are made of cherry wood — each leg is 1½" square and 28" long. To get this size legs, you can cut them from 8/4 stock (1¾" thick) and rip them to size. Or, they can be made by laminating two layers of 4/4 stock (13/16" thick) and then trimming them down to 1½" square.

Whichever method is used, the first step is to cut four legs to size. Then a total of three mortises are laid out on what will be the two inside faces of each leg, see Fig. 1.

Two of these mortises (at the very top and bottom of each leg) are for the shelf support frames. They're both positioned slightly off-center — 7/16" from the *inside* corner of the leg — to allow a little extra overhang for the top and bottom shelves.

After I marked the position of these two mortises, I arranged the legs in their final position and marked the proper face for the third mortise — for the side stretcher near the bottom shelf. (Arranging the legs in their final position, as shown in Fig. 3, helps clear up some of the confusion as to which face is which.)

This third mortise is also slightly off-center, but this time it's positioned 7/16" from the *outside* corner of the leg. (This position is necessary so the side stretchers are far enough apart to get the bottom shelf in place.)

Once everything is laid out, go ahead and cut the mortises. I used a drill press and a ⅜" brad-point spur bit to drill out most of the waste for the mortises. Then I cleaned up the cheeks of each mortise with a chisel. (See *Woodsmith* No. 8 for more information on cutting a mortise and tenon joint.)

HOLES FOR ADJUSTABLE SHELF. The middle shelf will be attached to the cart with adjustable shelf support brackets that are mounted in ¼" holes. I went ahead and drilled a series of four holes (2" apart) on each leg.

HOLES FOR CASTERS. Finally, I drilled a hole in the bottom of each leg for 2" Shephard casters (No. 9308). I bought these casters at a local hardware store. The same type (or something very similar) should be available at any good hardware store or lumber yard.

THE SIDE STRETCHERS

After the legs are completed, the next step is to cut the two side stretchers (B) that fit in the "middle" mortises. These stretchers help hold the cart together, but their main purpose is to prevent stuff from sliding off the bottom shelf.

First, I cut the two stretchers (B) to final size — 2¼" wide by 18½" long. (This length measurement includes the 1"-long tenons on each end.) Then the tenons are cut to fit the mortises in the legs. The finished shoulder to shoulder length of these stretchers should be 16½", see Fig. 2.

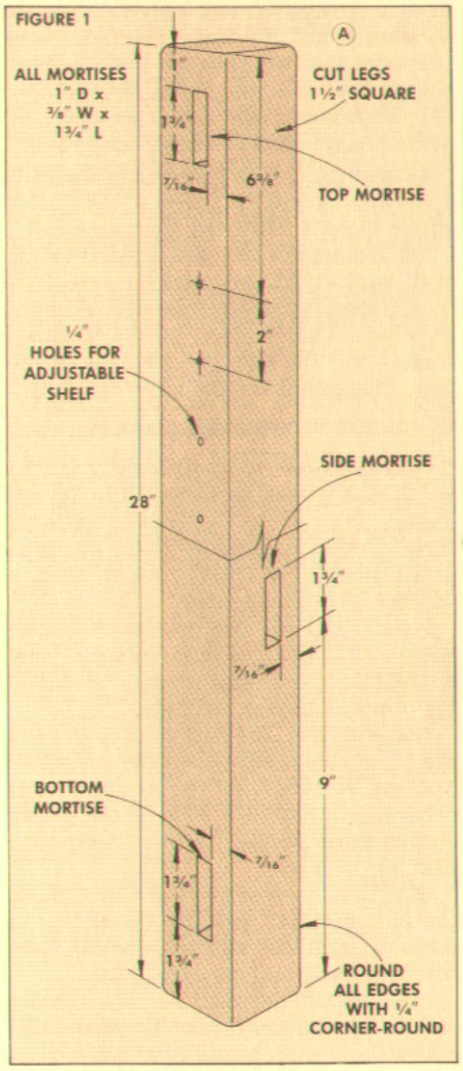

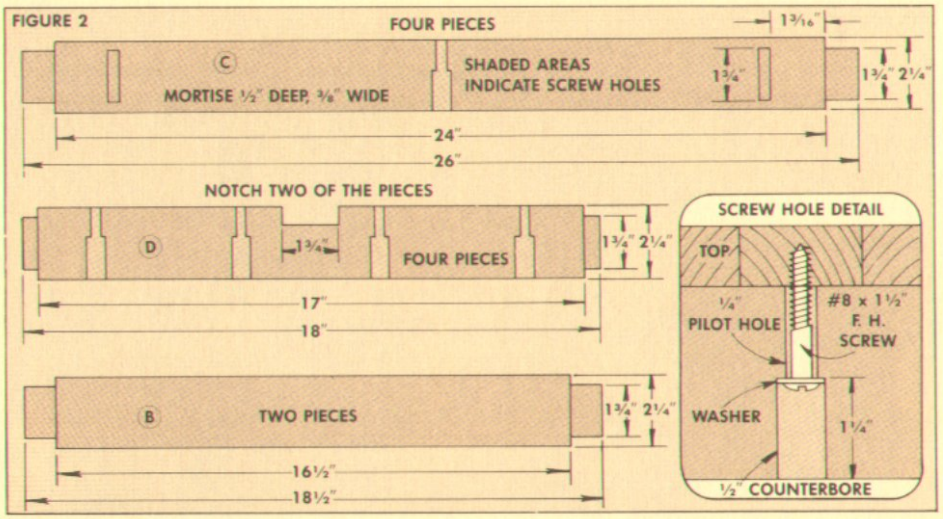

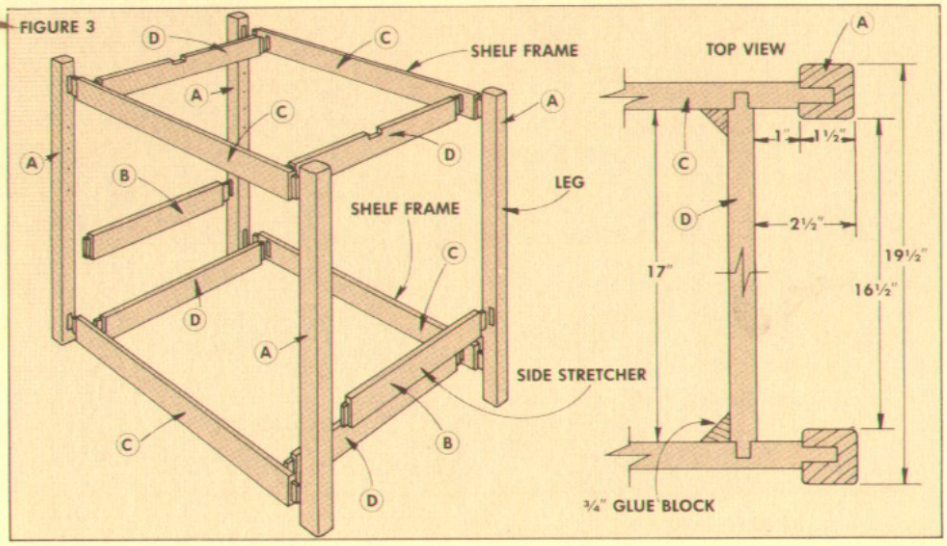

THE SHELF FRAMES

Next, I started in on the shelf support frames. Each of these frames consists of two long stretchers (C) and two short stretchers (D), as shown in Fig. 2.

Normally, all four of these stretchers would be attached directly to the legs of the cart. But I had to change things around a bit on this cart. The two long stretchers are mortised into the legs of the cart in the normal way. But the short stretchers are mortised into the long stretchers to allow room between the legs for the fold-down leaves, see Fig. 3.

Since this arrangement actually creates a frame, I cut and assembled the stretchers as two separate frames, and then attached them to the legs.

THE LONG STRETCHERS. The long stretchers (C) on the front and back of the cart are the easiest. First they're cut to width and length, and then tenons are cut to mate with the mortises on the legs, see Fig. 2. The shoulder to shoulder measurement of these stretchers should be 24".

MORTISES. Once the tenons have been cut, the next step is to cut the mortises for the short stretchers. I should mention here that the mortises we're showing in Fig. 2 are not really proper.

A twin mortise and tenon joint should be used here (see *Woodsmith* No. 12). But to simplify construction, I used a single mortise, and then added a corner glue block. This glue block adds two gluing surfaces and creates a fairly strong joint (even though it's not technically correct).

SHORT STRETCHERS. Next comes the short stretchers (D) for the frames. These stretchers should be "cut to fit" so they're compatible with the side stretchers (B). In order to determine the final length of the short stretchers, I dry assembled the legs, the side stretchers, and the long stretchers. Then I took the shoulder to shoulder length of the side stretcher (B), added the amount of off-set of the long stretcher on both ends (see detail in Fig. 3), and finally added on the length of the tenons.

Now the short stretchers (D) can be cut to length and the tenons can be cut to mate with the mortises in the long stretchers.

NOTCH FOR LEAF SUPPORTS. At this point you have all the basic pieces for the two shelf support frames. However, the top frame needs one more thing. The short stretchers on this top frame are notched for the leaf support system. Simply cut a 13/16" deep, 1 3/4" wide notch at the center of the short stretcher. Note: the depth of this notch (13/16") should match the thickness of the wood used for the leaf support arm (E).

COUNTERBORE. Before final assembly of the cart, I did two more things. First, I counterbored pilot holes in the shelf frames for the screws that will hold the top and bottom shelves in place, see detail in Fig. 2.

For the counterbore, I used a 1/2" bit, drilling to a depth of 1 1/4". (Since the stretcher is 2 1/4" wide, this depth leaves enough space for the shank of a 1 1/2" screw.) Next the pilot holes are drilled. These holes must be drilled oversized to allow for expansion and contraction of the top. (As the top moves with seasonal changes in humidity, the screws can "bend" in the oversized holes. I used a 1/4" bit to drill these pilot holes.)

ROUNDING OVER. The last step to complete the basic cart is to round over all four edges, as well as the top and bottom cor-

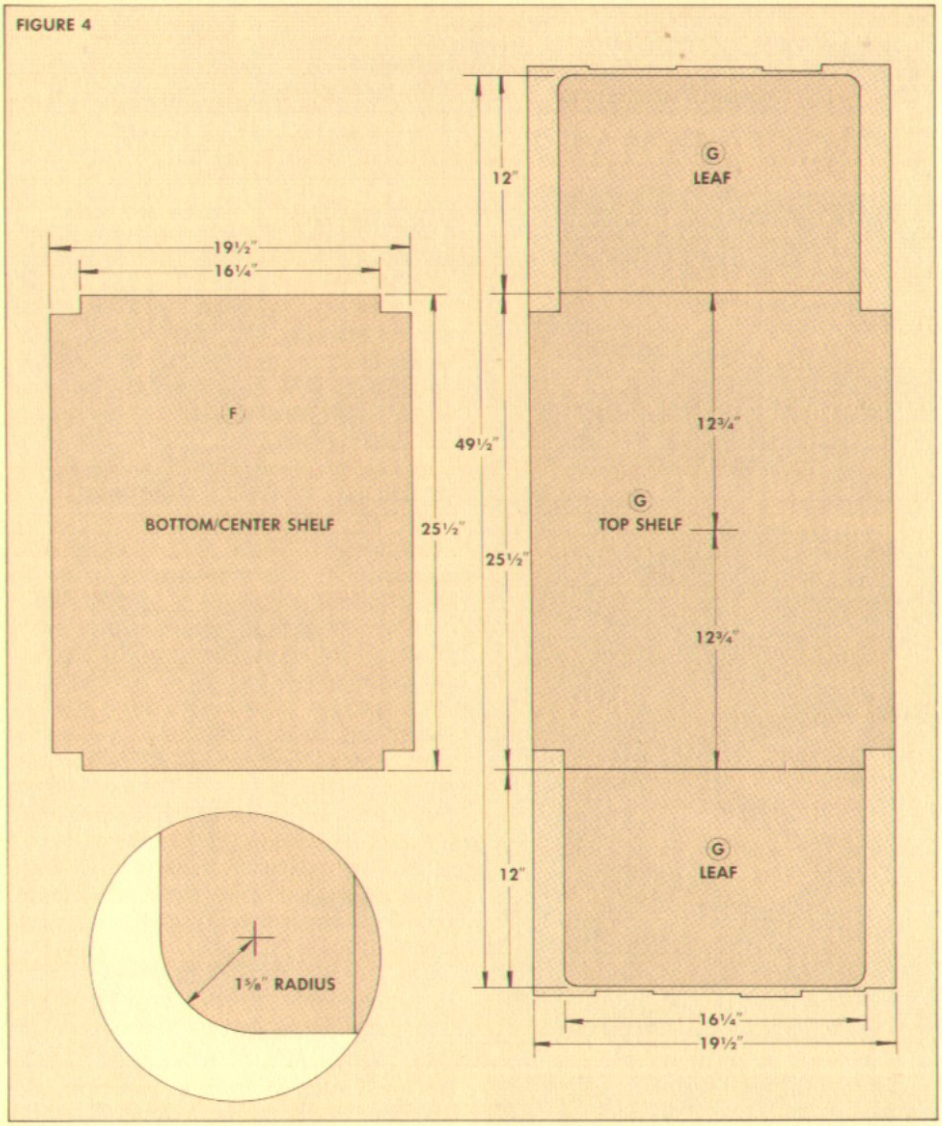

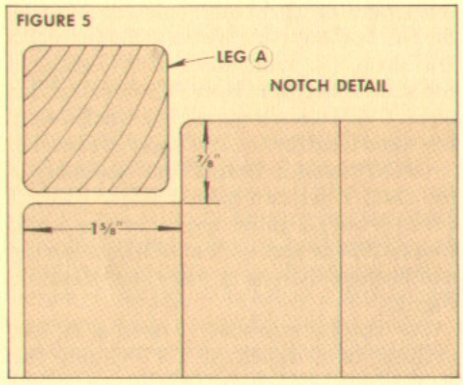

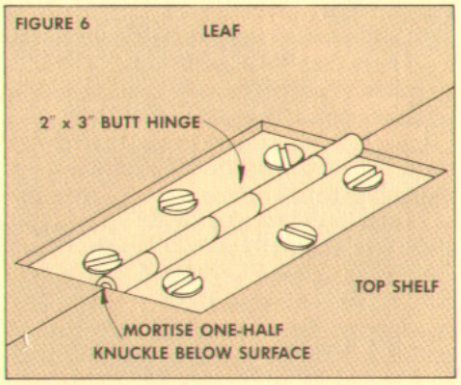

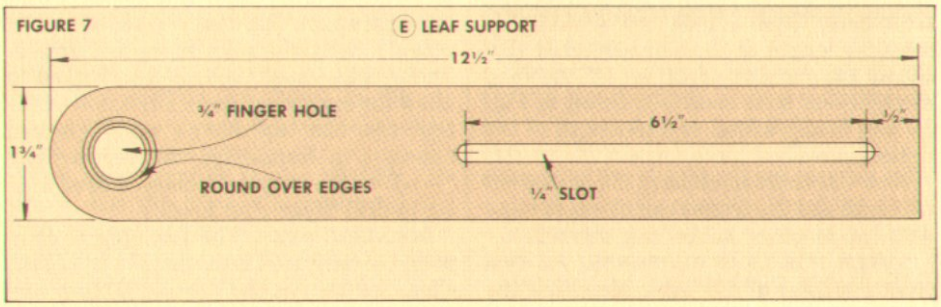

ners of the legs; all four edges of the side stretchers; and the bottom outside edges (the edge that will show on the outside of the cart) of all eight pieces for the shelf support frames. I did all of this with a ¼" corner-round bit on a router table.

ASSEMBLY. Before assembling the cart, I finished sanded all pieces. (It's a lot easier to do it now than after assembly.) Then to assemble the cart, I glued-up the shelf support frames (making sure they were flat and square as they were clamped together). Then I glued these assembled frames and the side stretchers into the legs. This completes the basic cart.

THE WORKING SURFACES

Now that the cart is complete, all you need are the three work surfaces — the top and leaves, and the two shelves. I made all three of these surfaces by gluing up strips of 4/4 stock (13/16" thick) to give them a butcher block appearance.

Note: I did not use dowels or splines when gluing-up these three "planks." Just a straight edge-to-edge gluing and clamping provides enough strength.

THE SHELVES. The bottom shelf (F) and the adjustable shelf (G) are the easiest — just cut 24 strips 1⅝" wide, 26½" long. (This length allows a little waste at the ends of these planks. They're trimmed to final length later.)

Glue 12 of these strips together to form the bottom shelf, and the remaining 12 strips to form the adjustable shelf. Then set them aside to dry overnight.

THE TOP AND LEAVES. To form the top and the two leaves (H), cut 12 more strips 1⅝" wide, but this time 50½" long. Then edge glue these 12 strips to form one long plank. Once again this rough length is more than is needed.

In effect, you're gluing up all three pieces (top and two leaves) at the same time so there will be a continuous grain pattern across the entire surface when the leaves are up.

After the glue has dried (overnight) on all three planks, plane them flat on both sides (see page 20 for more information on planing large surfaces).

TRIM TO SIZE. Next, the bottom shelf and the adjustable shelf can be trimmed to final width (19½"). To cut them to final length (25½"), I used the panel cutting jig shown in *Woodsmith* No. 22.

The plank for the top and two leaves is also trimmed to 19½" wide, but then it's cut into three pieces. First cut a 25½" section out of the middle of the plank, see Fig. 4.

Next, cut the two 12"-long leaves from the two "waste" pieces that remain. These leaves are trimmed down to a width of 16¼" (which is ¼" less than the distance between the legs of the cart). When doing this, I trimmed an equal amount off both

edges so the joint lines would still match those on the middle section after the leaves are attached.

CORNER NOTCHES. Figure 5 shows how the corners of the top, bottom, and adjustable shelves are notched so that they wrap around the legs. Each of these notches are marked out ⅛" larger than needed to allow for seasonal expansion. Then I cut them out by hand (with a back saw).

THE HINGES. After all three pieces are cut to size, the leaves are attached to the middle section with standard 2"x3" butt hinges (two per leaf).

Turn the top and the two leaves upside down and line up the edges of the leaf with the notches. After marking the position of the four hinge mortises, I chopped them out rather deep so the pins would be partially recessed below the surface, see Fig. 6. Go ahead and mount the hinges to make sure they fit properly. But then remove them until after the finish is applied.

Next, the outer two corners of the leaves are cut to 1⅝" radius, see detail in Fig. 4. And finally, the edges of the top, the leaves, the bottom shelf, and the adjustable shelf are all rounded over with the ¼" corner-round bit. (Once again, I used the router table to do this.)

Note: Do not round over the edges where the hinge mortises are. These edges are left square so there is only a small gap between the top and the leaves when the leaves are in the "down" position.

THE LEAF SUPPORT SYSTEM

The support system for the leaves is a simple system of sliding support arms (E). The key to this whole thing is that the depth of the notch in the top stretcher (D) must be exactly the same as the thickness of the arms (E). You need a good tight fit here so the leaves don't sag when they're raised to the "up" position.

After the arms are cut to size (see Fig. 7), a ¼"-wide stopped groove is cut down the middle of the arm. (I drilled a ¼" hole at both ends, and then used a ¼" straight router bit on the router table to cut this groove.) Then I drilled a ¾" diameter hole at one end of each arm to serve as a finger hold. The edge of this hole is rounded over with a ¼" corner-round bit.

MOUNTING THE ARMS. The support arms are mounted to the underside of the top with two ¼" x 1¼" lag bolts. The position of these bolts (see Fig. 8) is such that they act as a stop to limit how far the support arms can be pulled out. Also, they help keep the arms moving in a straight line. (For now, just drill the pilot holes for the lag bolts. They're not screwed in until later.)

To prevent the two arms from colliding as they're pushed in, I mounted a ¼" dowel pin at the center of the top, see Fig. 8.

FIGURE 8

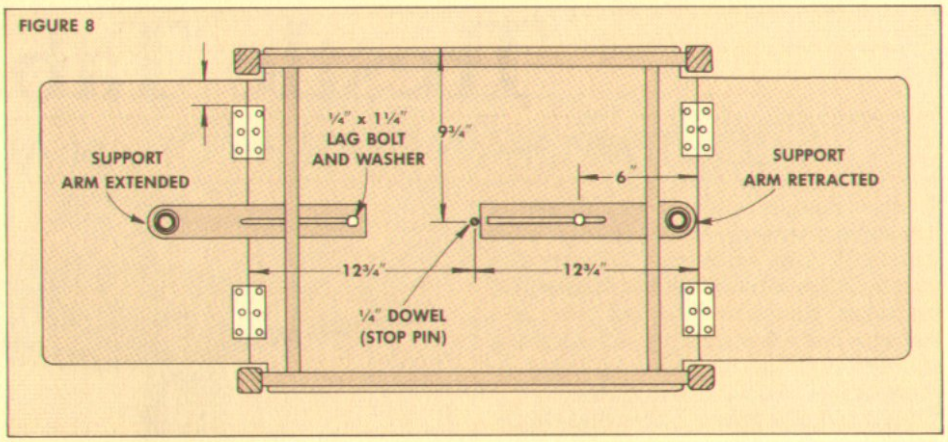

FIGURE 9

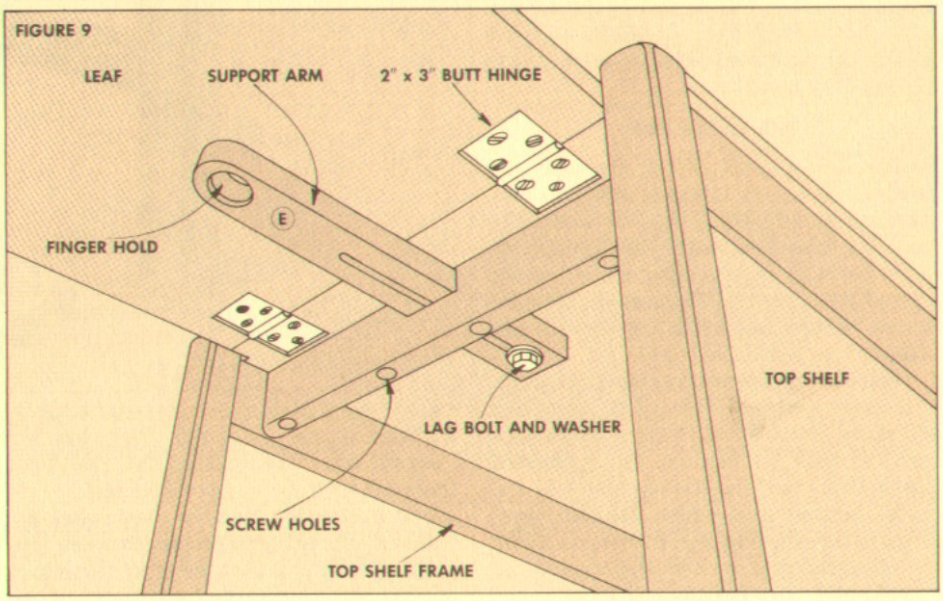

FINISHING

Before final assembly of the cart, I applied two coats of Defthane (polyurethane) to the cart, and to the top, the leaves, and the two shelves.

After the finish was dry, I mounted the hinges to the top and two leaves. Then I attached this assembly to the top frame. To get it properly aligned, clamp the top (with the leaves attached) to the frame so the leaves are centered between the legs.

Then drill pilot holes in the top, using the counterbored holes in the stretchers as guides. Finally, the top can be screwed to the frame with #8 x 1½" wood screws. Next, attach the bottom shelf to the bottom frame using the same procedure.

And finally, the leaf support arms can now be secured underneath the top with the lag bolts and ¼" washers. Then the adjustable shelf is installed with L-shaped shelf support pins.

The last (and most critical) step is to put the microwave on the cart, wheel it next to the T.V., heat up a double cheese pizza with anchovies and sauerkraut, and sit back and watch the Monday Night football game.

MATERIALS LIST

Overall Dimension - 30"H x 28"W - 19½"D

A	Legs (4)	13/16 x 1½ - 28
B	Side Stretchers (2)	13/16 x 2¼ - 18½
C	Long Stretchers (4)	13/16 x 2¼ - 26
D	Short Stretchers (4)	13/16 x 2¼ - 18
E	Leaf Support (2)	13/16 x 1¾ - 12½
F	Shelves (2)	13/16 x 1⅝ - 25½
G	Top/Leaves (1)	13/16 x 1⅝ - 49¾

CUTTING DIAGRAM

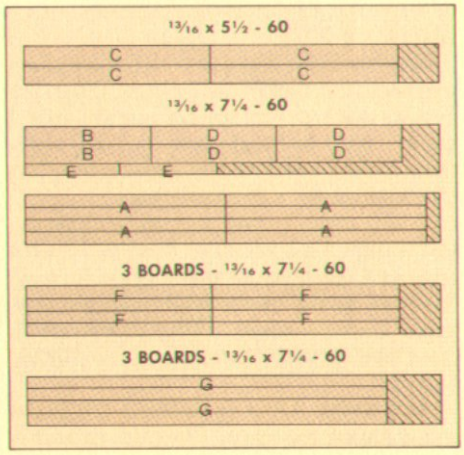

Trestle Table

A CONTEMPORARY VERSION OF AN AMERICAN CLASSIC

Trestle tables have been a popular part of American homes ever since there was an America. And with good reason. The unique design of this table was comfortable in Colonial homes two-hundred years ago; and with just a few changes, it fits right in with contemporary surroundings today. In short, it has stood the test of time.

We decided to take a rather contemporary approach to the design of the trestle table shown here. Yet, to build it, we went back to the old-time methods: the table top is planed by hand.

THE TABLE TOP

Besides being hand-planed, the table top presents some real challenges from a construction standpoint. First, we wanted to have the traditional end caps (or bread-board ends as they're also called) on the ends of the table top. These caps are a nice design feature, but a real hassle to mount. (I'll get into the details later.)

The other problem was simply a matter of money. I wanted the top to look thick and sturdy, but I didn't want to spend a small fortune on lumber. So, I cheated (just a little) and built the top with 4/4 (13/16" thick) lumber and added "thicknesser" strips to the edges to beef them up and give the appearance of a much thicker top.

THE BASIC TOP. The top starts out as one big slab of lumber. To get this slab, I ripped enough boards to get a 35" width and a length of 57". (This is the rough length. It's trimmed down to 56" later.)

Under ideal situations you would rip 14 strips of wood 2½" wide and 57" long to get the basic slab for the table top. But the wood I was working with (rift-sawn white oak), was less than ideal. So I had to cut some of the strips down to about 2" wide, while others are 3" wide. (The actual width of each strip doesn't really make much difference, as long as you wind up with a slab 35" by 57".)

However, the way these strips are glued together does make a difference. When I'm dealing with a surface this large, and I know I want to hand-plane it, I do everything I can to reduce the amount of effort involved to get a flat table top.

In this case, I used splines to align the top surface of all the boards. I also arranged the boards so the grain on each one was going in the right direction to make planing easier. (This procedure is described in more detail in Shop Notes, page 22).

TRIM ENDS. After the boards are glued and clamped together, I wound up with a ragged arrangement of ends that had to be trimmed square. To do this, first I marked lines 56" apart (the final length). Then I cut them off with a circular (Skil) saw.

PLANE SMOOTH. Now the real fun begins. I used a jack plane to rough down the top, planing directly across the grain to remove any variation between the surfaces of the boards. Then I switched to a jointer plane (although a jack plane could be used here) to plane with the grain. After some amount of work, I finally got both sides of the table top smooth.

THICKNESSER STRIPS

Now the thicknesser strips can be added. Two of these strips (B) are glued to the side edges of the table top to make it look thicker. They're ripped to a width of 2½" and then glued and clamped to the edges of the table top. After the glue is dry, this double-thick edge can be planed smooth.

END STRIPS. The other two thicknesser strips (C) are mounted at each end of the top to help support the end caps. However, these strips can *not* be glued down. The table top must be free to move (expand and contract) with seasonal changes in humidity.

To allow for this movement, I screwed these strips in place using a slot screw method. This simply means that a series of pilot holes is drilled to form a slot for the screw, see Fig. 3. This way, as the table top moves, the screws can bend (or shift position) along the slot to move with the table top.

These end strips are also ripped 2½" wide, but the length should be about ½" *less* than the distance between the side thicknesser strips, Fig. 3. This allows a ¼" space between the side strips to allow for movement of the table top. After the end strips are cut to size and screwed in place, I planed them flush with the ends of the table top.

END CAPS

As mentioned above, the end caps (or bread-board ends) are a traditional feature on trestle tables, but they're a real hassle to mount. The problem has to do with the direction of grain.

The grain of the end cap runs at a right angle to the grain of the table top. Thus, the table top will move (in width) much more than the end caps (in length).

What this boils down to is that the end caps can not be glued in place. They must be mounted to allow for the movement of the top. There are several methods for mounting end caps to allow for this movement — some good, some not so good.

But the one we're showing here is one of the best ways we've come up with to provide the strength needed at the end of the table. The mounting procedure I used is a combination of slotted screws and a tongue and groove joint. This is a rather typical approach. But Ted came up with the idea of adding the end strips (C) to add strength.

The real purpose of these strips is to serve as extensions of the end caps under the table, refer to Fig. 7. Since the grain of

these strips runs parallel to the grain of the caps, the end cap can be glued to the end strip to add a considerable amount of strength. (Normally, no glue at all is used on end caps.)

THE TONGUE. The first step in mounting the end caps is to cut a tongue on both ends of the table top. This tongue is actually the result of cutting two rabbets — one on the top and one on the bottom side of the table top, see Fig. 4.

I sized these rabbets in order to leave a tongue that's at least ½" thick. (Which means that the depth of the rabbets will vary depending on the thickness of the table top after it's been planed.)

END CAPS. Once the tongues are formed, work can begin on the end caps (D). Both end caps are glued up of two 4/4 boards. Then they're ripped 5" wide and cut to length (to match the width of the table top). I also rounded the ends to a 2" diameter, see Fig. 5.

Now a groove can be cut to fit tightly on the tongue. I cut out most of the waste for this groove on a table saw, and then cut the final groove with a ½" straight router bit on the router table.

Shop Note: I used a ½" router bit for the final cut because it cuts a flat-bottomed groove with very clean sides. This is also why the tongue is cut exactly ½" thick.

Once the groove is cut, the end caps are joined to the table top with a slotted-screw method. What you're actually doing here is using a screw to "clamp" both sides of the groove (in the end cap) onto the tongue (of the table top), see Fig. 7. Since the end cap remains rather stable in length, slots must be cut in the tongue (which is the part that will move).

To do this, slide the end cap in place and drill a series of pilot holes down its length, see Fig. 5. Then remove the end cap and "widen" the pilot holes in the tongue to form slots, see Fig. 6.

To give the end cap the added strength (mentioned above), I glued it to the end thicknesser strip (C), but only to this strip. As glue is applied, make sure you don't get it on the side thicknesser (B), or on any other part of the tongue.

FINAL STEPS. Once the end caps are mounted, it's very difficult to plane them to exactly the same thickness as the table top. I got as close as I could, and then used a little trick that really saves a lot of headaches.

Using a router with a 1/16" straight bit, I routed a very small groove between the edge of the end cap and the end of the table top (see Fig. 7). This adds a visual and physical "break" between the change in the grain direction, and makes any variation in the thickness much less noticeable.

Finally, I rounded over all the edges of the table top with a router and ½" corner-round bit.

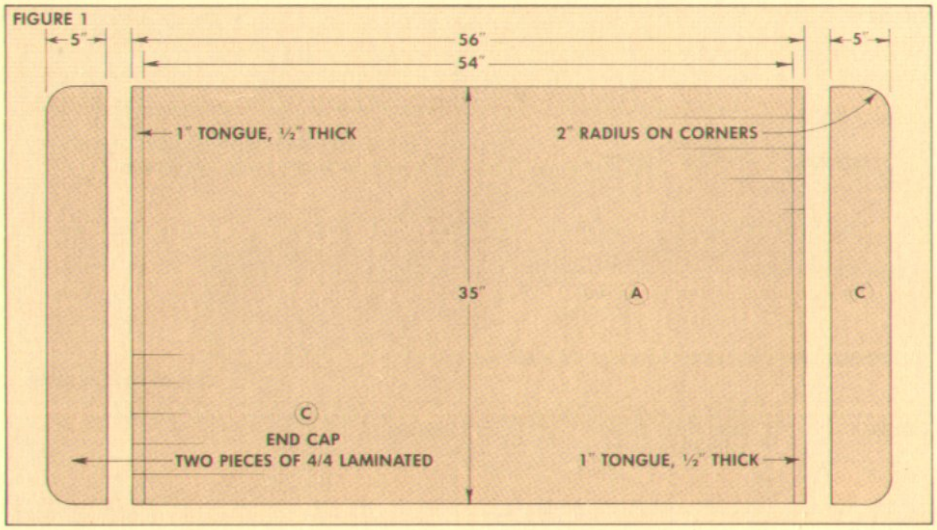

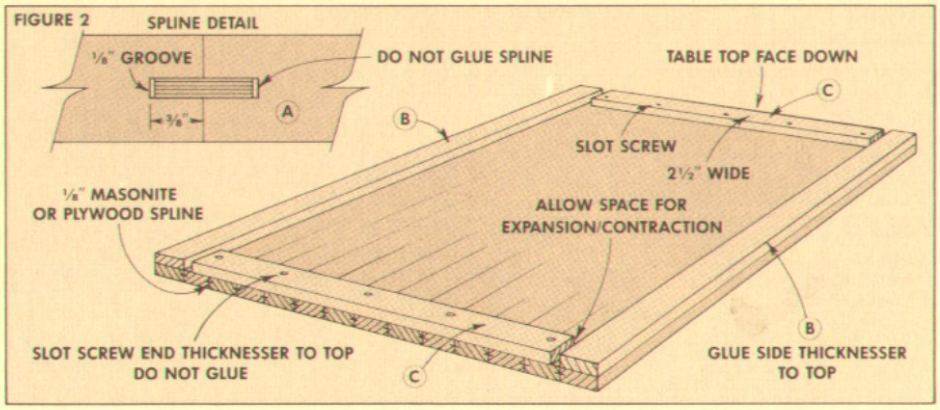

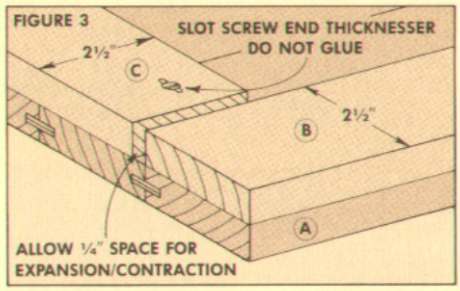

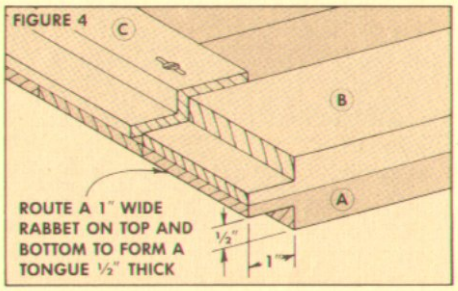

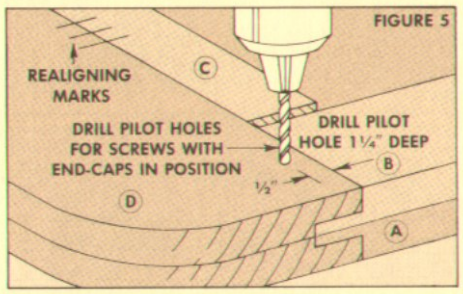

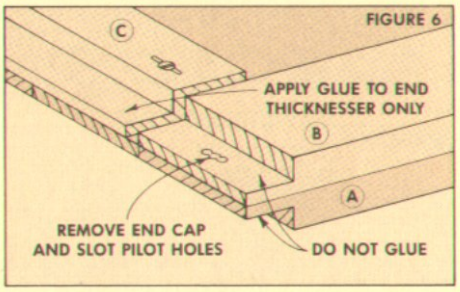

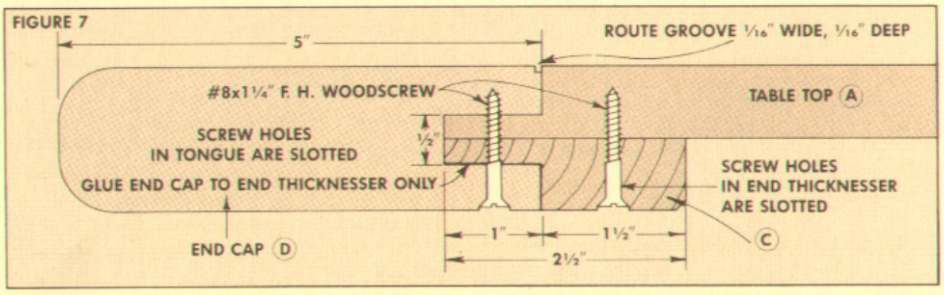

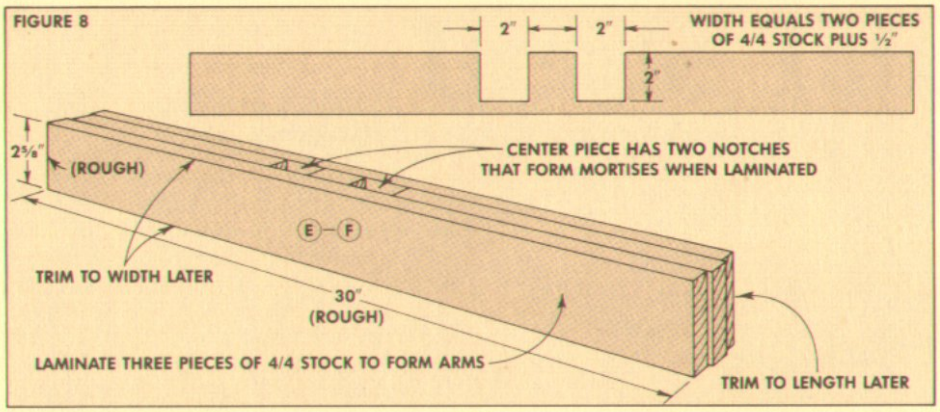

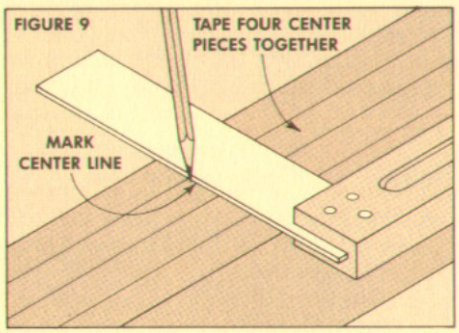

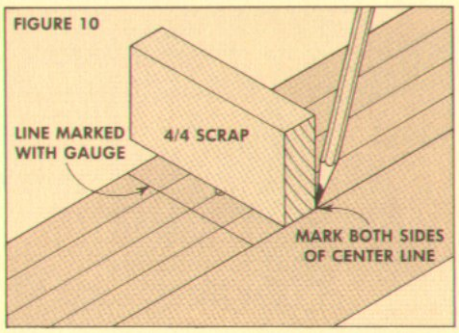

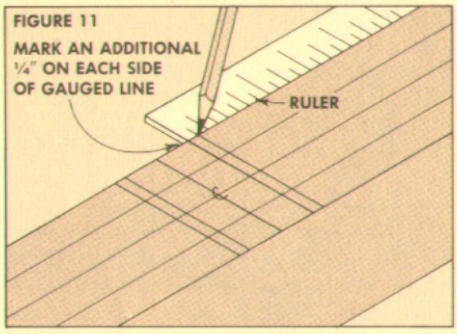

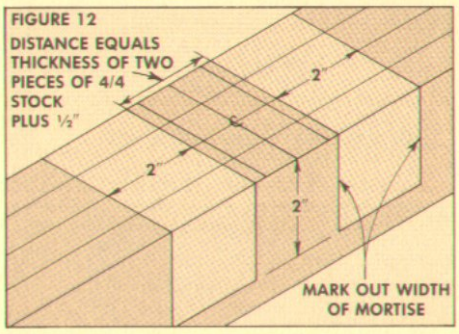

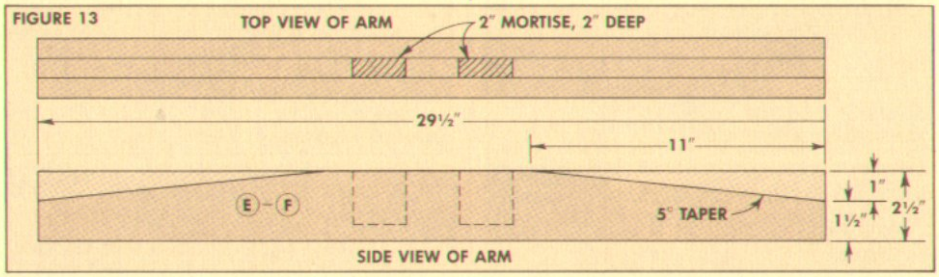

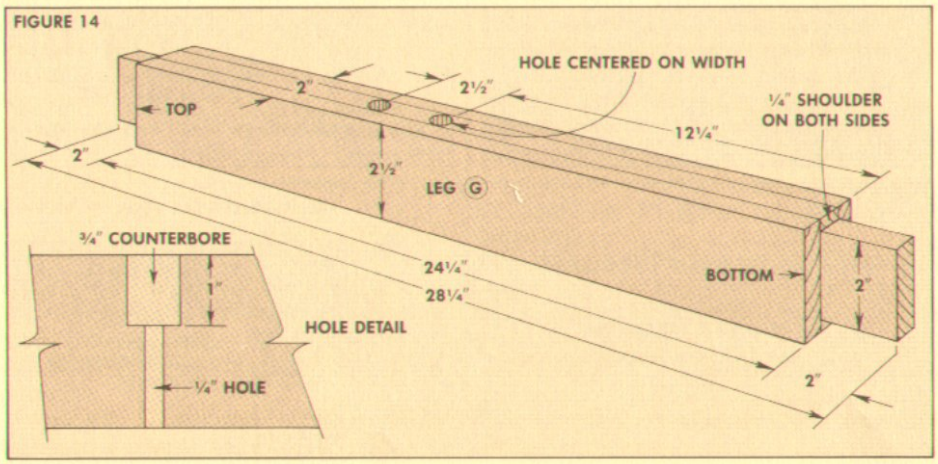

THE TRESTLES

This table gets its name from the "trestles" that support the table top. Each trestle consists of an arm (E), two uprights (G), and a base (F). (Figure 16 shows what this final assembly looks like.) To build these trestles, I started work on the arms and bases.

ARMS AND BASES. The arms and bases are identical — a total of four pieces, each one consisting of three 4/4 boards glued together. To build them, first I ripped a total of 12 boards to rough dimensions of 2⅝" wide and 30" long.

MORTISES. I'd like to say that I chopped out the mortises in these pieces the old-fashioned way — with a mallet and chisel. But that's just too much work, so I opted for a much easier method.

Before gluing these boards together, I cut notches in the "middle" board of each three-board assembly, see Fig. 8. When these middle boards are "sandwiched" between the outside boards, the notches automatically form mortises.

Although this method is a lot easier than chopping out mortises by hand, there's still some careful marking and cutting to do. First I taped the four middle boards together with masking tape. Then I marked a center line on this assembly, see Fig. 9. (Taping the boards together allows you to cut all four pieces at once to yield identical "mortises.")

The notches must be spaced to allow room for the rail that ties the two trestles together. To get the proper spacing, I used a piece of scrap that was the same thickness as the boards for the rail, and marked off this thickness on both sides of the center line, see Fig. 10.

Next I wanted to allow for a ¼" shoulder on the tenons (on the ends of the uprights), so I marked another set of lines ¼" to the outside of the first two, see Fig. 11.

Finally, I wanted the tenons to be 2" wide, so I marked these lines, see Fig. 12. This was the final layout for the notches. Then it was just a matter of cutting out the waste on a table saw.

Once the notches were cut, I glued and clamped each middle board between two outside boards. After the glue was dry, I trimmed the arms and bases to their final dimensions, see Fig. 13.

CUTTING THE TAPER. All four pieces are gently tapered from the ends to where the upright will be. This taper starts 1" down from the top edge, and ends ¾" out from the mortise, see Fig. 13. To cut this taper I used a taper jig set at 5°. Finally, I rounded off the outside corners on a band saw.

THE LEGS. Each of the four uprights (legs) are also glued up of three boards. Once again, I cut a total of 12 boards to a rough length of 25".

Shop Note: It would seem much easier to

cut the outside boards 2″ short and simply leave the middle board "long" to form the tenon. But this can cause more problems than it's worth because the boards are bound to slip around as they're glued and clamped together.

THE TENONS. After the uprights are glued up, I cut the tenons at each end. The critical thing here is the "shoulder-to-shoulder" distance between the tenons. This distance (24¼″) must be equal on all four uprights, see Fig. 14.

After the tenons were cut, I ripped (actually resawed) the uprights down to a 2″ thickness (taking 3/16″ off each face). This makes the uprights about ⅜″ thinner to allow for the chamfered edge on the base and arm. The last step on the uprights is to counterbore two holes in each upright for the carriage bolts that hold the rail in place, see detail in Fig. 14.

THE RAIL

The rail (H) that ties the two trestles together is glued up of two 4/4 boards, see Fig. 15. After the rail was trimmed to final length and width, I dry-assembled the trestles (the arms, uprights, and bases), and clamped the rails in place. Then I marked and drilled the pilot holes for the carriage bolts.

When the rail is mounted between the legs, you may find the fit is not exactly correct. If there's either too much or not enough space between the legs, the tenons can be shaved down a bit and moved one way or the other to compensate.

THE FINAL STEPS

Before final assembly, I knocked off all the edges on all of these pieces (arms, uprights, bases and the rail) with a 45° chamfer bit. Then I finish-sanded everything (including the table top) with progressive grits of sandpaper (starting with 100-grit and finishing with 320-grit).

FINAL ASSEMBLY. Now the uprights can be glued into the bases and arms. After the glue is dry, the rail is bolted between the uprights and then the counterbores are capped with ¾″ oak buttons, see Fig. 17.

MOUNTING THE TOP. Finally, to join the table top to the trestles, I drilled holes in the underside of the table top for rosan inserts, see Fig. 18. Then I counterbored holes in the arms for ¼″ hex-head bolts. However, to allow for movement of the table top, the pilot holes for these bolts are drilled oversize (⅜″).

FINISHING. Since I built this table with oak, I decided to apply filler to all parts. One of the few fillers that's compatible with polyurethane is *Behlen Pore-O-Pac* paste wood filler. (Available from *Woodcraft Supply* catalog, No. 08N31-EZ, $9.75 per quart.) After the filler was dry and sanded smooth, I finished this table with *Minwax* polyurethane.

FIGURE 15

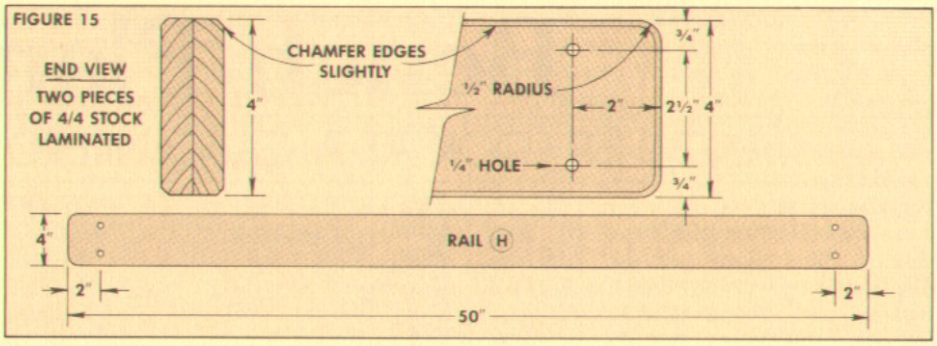

FIGURE 16

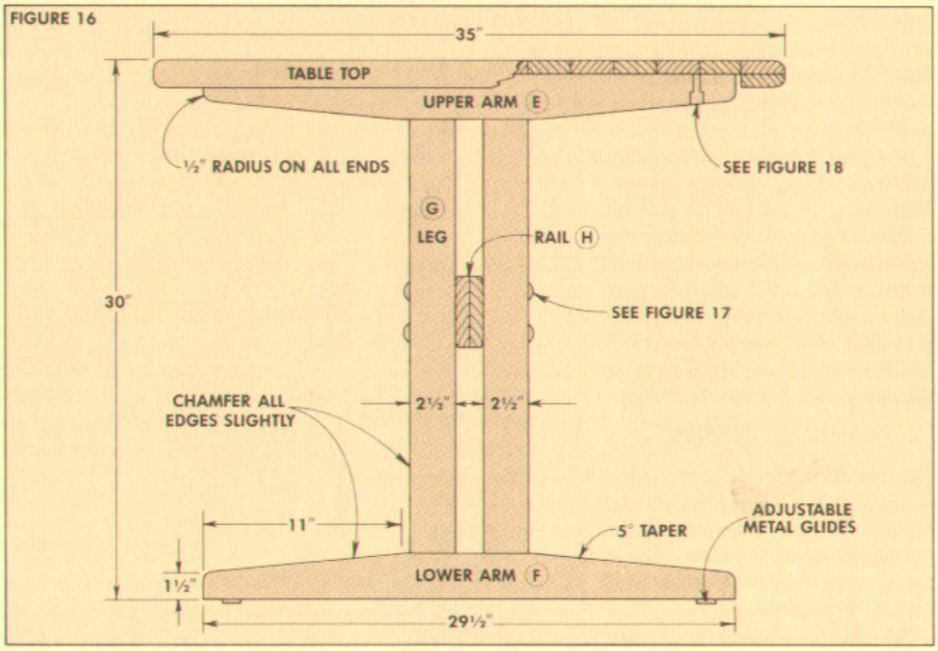

FIGURE 17

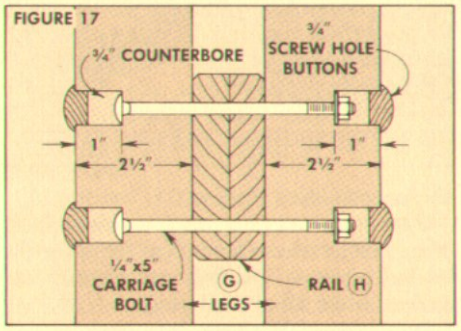

FIGURE 18

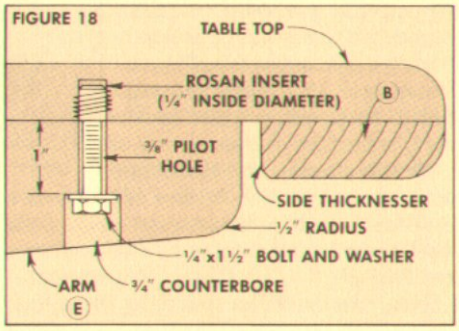

MATERIALS LIST

	Overall Dimension - 30″H x 35″W - 64″L	
A	Top (1)	13/16 x 35 - 56
B	Side Thicknesser (2)	13/16 x 2½ - 56
C	End Thicknesser (2)	13/16 x 2½ - 29½
D	End Cap (2)	1⅝ x 5 - 35
E	Arms (2)	2¼ x 2½ - 29½
F	Base (2)	2¼ x 2½ - 29½
G	Legs (4)	2 x 2½ - 28¼
H	Rail (1)	1⅝ x 4 - 50

Note: The following pieces consist of several 4/4 boards (13/16″ thick) glued together:
End Caps (D) — two boards each.
Arms (E) — three boards each.
Bases (F) — three boards each.
Uprights (G) — three boards each.
Rail (H) — two boards.

CUTTING DIAGRAM

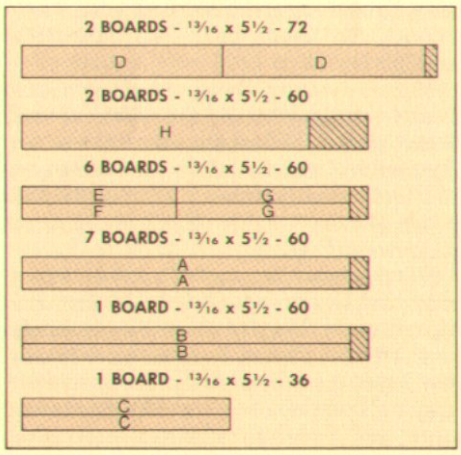

Bench Planes

ANOTHER LOOK AT A CANTANKEROUS OLD FRIEND

No motorized tool can even come close to the quality of work a hand plane will do. Mighty strong words, you say, for a tool that's been around for the past 2,000 years. But it's true. And I think it's kind of refreshing to know there's at least one tool in the shop that doesn't have to be "plugged in" to do its job.

Yet, hand planes seem to intimidate many woodworkers. This fear is usually based on the feeling that hand planes require a tremendous amount of skill to use. Actually, it just takes a lot of elbow grease. The real skill involved with a hand plane is adjusting it so it does what you want it to do.

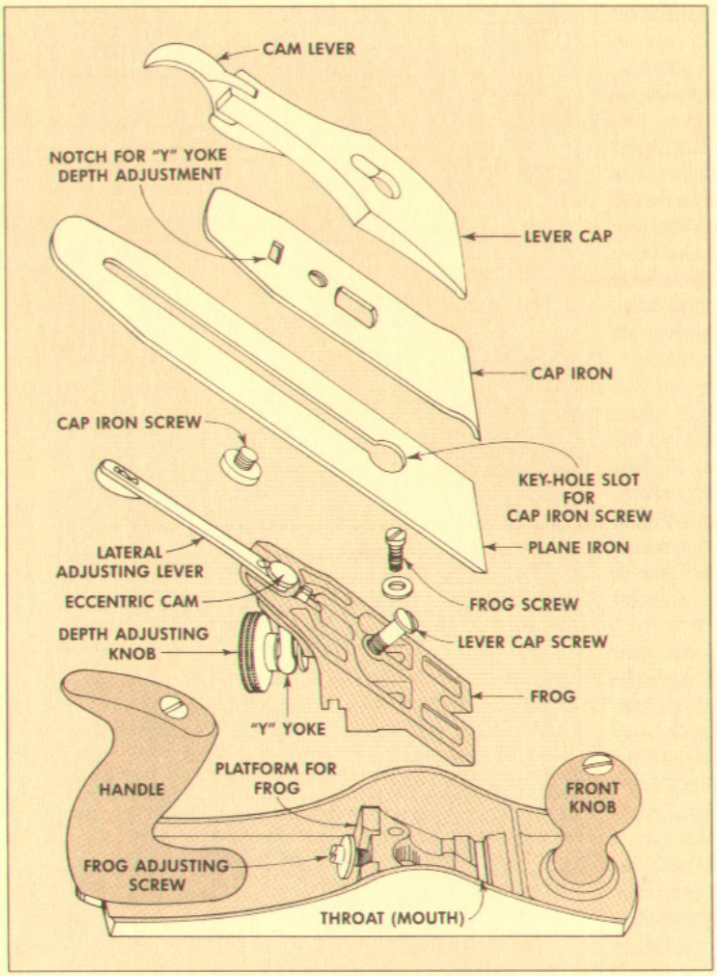

TYPES OF PLANES

The entire family of planes consists of hundreds of individual styles. But all of these planes can be grouped into two basic categories: bench planes and specialty planes.

Speciality planes are made for specific purposes (cutting rabbets, or grooves, or molded edges). Although some of these planes are still manufactured today, they are, for the most part, collectors' items.

Bench planes are the ones used to smooth the surface or edge of a board. (Nowadays that means most of the work done by hand planes.) Bench planes are divided into four basic styles (lengths). The only real difference among these four styles is the length of the plane body (the sole), and to some extent the width of the plane iron (cutter). The four styles are: smooth (9¾" long), jack (14"), fore (18"), and jointer (22").

Note: Although there are many variations on the length (and the width) of each bench plane, the lengths given above are the current "standards" for the two largest full-line manufacturers of steel-bodied bench planes: Stanley (U.S.) and Record Ridgeway (England).

Block planes are sort of a sub-category of bench planes made specifically for planing end grain. They're also the most widely misused of all planes. Because block planes are small and relatively inexpensive, they're sold in almost every hardware store, and generally thought to be good all-purpose hand planes.

However, the low pitch of the blade (about 20°) makes them ideal for their intended purpose (planing end grain), but useless as an all-around plane.

SELECTION. Of these four basic styles (lengths) of bench planes, which one is the best? The ideal situation (if you really want to get serious about this business of hand-planing) would be to have a selection of three sizes: smooth, jack, and either a fore or jointer plane.

If you're not quite so serious, the best choice for an all-around plane is the jack (jack of all trades). The jack plane in our shop gets the most use by far. In fact, it's used for everything from smoothing down relatively small panels to planing the surface of a large table.

PARTS OF A BENCH PLANE

No matter what style (length) the plane is, the key to the whole thing is that it must be properly sharpened and adjusted before it will do much of anything. In fact, a brand new plane is little more than an intricate assembly of expensive steel. In most cases it needs some work before it becomes a tool.

The first step is to dismantle the plane to get all the pieces working the way they're supposed to. When you start tearing it apart, what you end up with are the five basic pieces shown in Figure 1.

These five parts are: the lever cap, the cap iron, the plane iron, the frog, and the body of the plane.

THE LEVER CAP

The first part of the plane that can be removed is the lever cap. This is just a large piece of nickel-plated cast iron with a cam-action lever at the top. The sole purpose of this lever cap is to hold the next two pieces (the cap iron and plane iron) firmly in place.

Since that's its sole function, the lever cap doesn't seem like a big deal. But this little gizmo is the one thing that transformed the entire plane-making industry.

In 1858 when Leonard Bailey patented the first cam-action lever cap to hold the plane iron in place, it replaced the old method of using a wooden wedge, and forged the way for "modern" steel-bodied planes used today.

Enough history. From a functional standpoint, very little ever goes wrong with the lever cap. If anything, it only needs to be oiled for smooth action.

The lever cap is held in place with the lever cap screw (actually it's a machine bolt). There's no need to remove this screw; its main function is as a fulcrum for the lever/cam. If the movement of the lever/cam is too loose or too tight, just loosen or tighten this screw (about a quarter turn usually does it).

THE CAP IRON

Once the lever cap is removed, the cap iron and the plane iron can be lifted out. These two "irons" are held together with a cap iron screw which rides in a long "key-hole" slot in the plane iron. (This assembly is sometimes referred to as a "double iron.")

Before the cap iron came along, the plane iron (cutter) was one thick piece of steel that had a bad habit of chattering. The original purpose of the cap iron was to add stability to the plane iron.

But the shape of the cap iron is such that it also serves as a "chipper" (as it's sometimes called, or a chipbreaker). The rounded "nose" at the end of the cap iron presents a steeper angle which breaks and deflects the shavings as they're sliced off the board.

On most new planes the tip of the cap iron is not properly finished. In fact, on cheap planes, the cap iron is just a square-edged piece of steel with a bent "nose" on the business end — no further machining has been done.

This causes problems. If the trailing edge (heel) of the nose is the only part that actually touches the plane iron, a small "V" cavity is created, see Fig. 2. As the shavings peel off the cutter, they jam in this cavity.

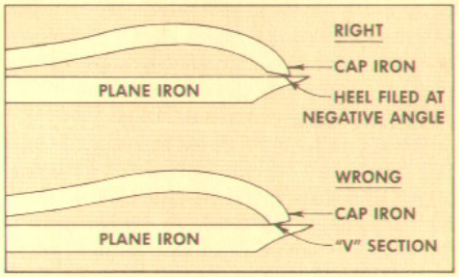

The cap iron is supposed to be formed so the *leading* edge of the cap iron rests firmly on the cutter, and the trailing edge is slightly raised off the surface. With this shape, the shavings will deflect smoothly over the top of the "nose."

To work it into shape, file a slightly negative angle at the end of the cap iron to form a pointed edge. Since a file leaves a rather rough surface, it's best to take it one step further and hone the tip (on a fine India stone) to get a smooth surface.

After all this work, you may find that the tip of the cap iron no longer comes in contact with the face of the plane iron. If this happens, put the nose of the cap iron in a vise and bend it to a slightly greater arc. I try to bend it just a little "too far" to put a little spring in the cap iron so when it's mounted to the plane iron, you'll be sure to get a good, snug fit.

THE PLANE IRON

Before the advent of steel-bodied planes, the entire plane was made of wood . . . with the one exception: the cutter. It was only natural to call this thing the "plane iron," since it was the only metal part of the plane. Now that term can be a little confusing (but I still like to use it anyway). And to add to the confusion, it's also called a cutter or blade.

No matter what you call it, the whole key to the plane iron can be summed up in one word: sharpness. If it's not sharp, the plane won't work. The next two pages are devoted to the methods we use to sharpen a plane iron (so we won't get into it here).

THE FROG

Now we're down to the frog. The main purpose of the frog is to act as a mounting platform (with a pitch of 45°) for the plane iron and cap iron assembly The frog is attached to a raised platform on the plane body with two machine bolts (called frog screws). These screws fit through two slotted holes at the base of the frog.

The one problem you find with the frog is that it needs to be cleaned. Usually the sloping face (that the plane iron rests on) is coated with some sort of finish (either paint or lacquer) to protect it from rusting.

More likely than not there are runs (drip marks) in this protective coating. This creates an uneven surface for the plane iron (which means the coating is doing more harm than good). I scrap off all of this coating and then use some steel wool to polish it to a smooth surface.

Then to get a really good surface, I clamp the frog in a vise, and use a fine India stone to hone (flatten) the surface so the plane iron rests on a flat (unobstructed) surface.

Attached to the frog are two more things that transformed the "modern" steel-bodied plane into an extremely useful tool: the depth adjusting knob, and the lateral adjusting lever.

DEPTH ADJUSTMENT. The depth (vertical) adjusting knob (also invented by Leonard Bailey) is a brass knob with a Y-shaped yoke attached to it. Together, these two things allow easy and quick adjustment of the depth of cut of the plane iron.

At one end of the yoke the two legs of the "Y" straddle a groove on the shank of the adjusting nut. The other end of the yoke fits in a square hole in the cap iron. As the brass knob is rotated in and out, the yoke moves the cap iron (and thus the plane iron) up and down, to adjust the depth of cut.

Although this mechanical arrangement does the job it's supposed to, there is often an excessive amount of slack in it. Thus, the knob has to be rotated an inordinate amount before the yoke actually starts moving the cap iron.

Some of this slack is the result of too much distance between the legs of the "Y" and the sides of the groove in the brass knob. To take up the slack here, remove the brass knob, and use a screwdriver to "crowbar" one leg forward (so it touches the front shoulder of the groove), and the other leg back (so it touches the back shoulder of the groove).

This will take out some of the slack, but most of this problem is at the other end of the yoke (where it enters the square hole in the cap iron). You can go through a lot of effort to make this work more efficiently, but I don't mess with it. Partly because I'm used to the hassle, and partly because the procedure I use to adjust the depth of cut reduces the amount of "playing around" here. (These procedures are described on page 20.)

LATERAL ADJUSTMENT. The lateral adjusting lever (at the top of the frog) aligns the cutting edge of the plane iron so it's even with the sole of the plane.

This lever is actually an eccentric (off-center) cam that fits in the "key-hole" slot of the plane iron. Not much has to be done to it, but it does enjoy a drop of oil every once in a while.

THE PLANE BODY

Now that all the other parts have been removed, all that's left is the steel body. This is one piece of cast iron that forms the sole and sides of the plane.

On some of the better planes, there's a frog adjusting screw located at the rear of the raised platform that holds the frog. As the name implies, this screw is used to adjust the position of the frog.

THE THROAT. In front of the platform for the frog is an opening in the sole of the plane called the throat (or mouth) where the plane iron pokes through. On some new planes the front edge of this opening is out of square, or slightly rounded.

Since the plane iron is often set very close to the front edge of the throat, you can run into a lot of problems trying to get the iron aligned if the throat is not perfectly straight. It should be filed down until it's both straight and square to the sides of the plane.

THE SOLE. Now we're down to the bottom line: the sole of the plane. On steel planes the sole can be either smooth or corrugated. A corrugated sole means that a series of grooves have been ground into the length of the sole. Presumably, these grooves reduce the amount of friction and suction between the plane and the wood, thus providing a smoother (easier) planing action.

No matter what kind of sole the plane has the critical thing is that it is absolutely flat. As it turns out, many planes tend to be a little on the wavy side. This is sometimes the result of poor machining at the factory, and sometimes a natural movement of the steel. If the steel has not been given enough time to cure before the sole is machined flat, the "green" steel can warp.

If the sole is not flat, getting it that way can be a real hassle. It's possible to tackle this task in your shop, but it's a lot of work. We managed to flatten the bottom of one plane using the method described in Shop Notes, see page 22.

Sharpening Plane Irons

GETTING TO THE POINT

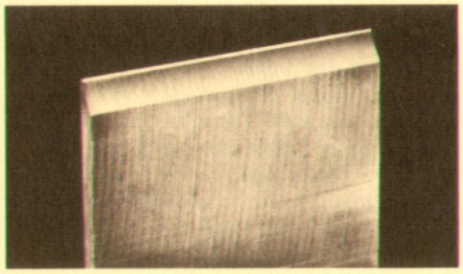

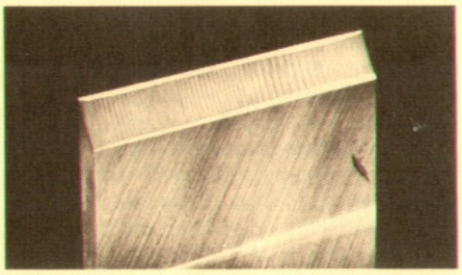

Although there are a lot of adjustments that can be made on a plane to improve its performance, by far the most critical factor is the sharpness of the plane iron (the cutter). It boils down to this one fact: A dull (or improperly sharpened) plane iron causes most of the problems associated with using a plane.

For example, if the plane iron is dull, the plane will hop and skip all over the board, causing an excessive amount of "tear-out" in the process. Also, if the cutting edge is not perfectly straight, it will create a gouged or scalloped surface.

Whenever I'm faced with one of these problems (or if the plane just doesn't seem to be doing the job it's supposed to), the first thing I do is re-sharpen the plane iron.

The sharpening process is very similar to the one described in *Woodsmith* No. 20 for sharpening a chisel. Without going into a big re-hash of that article, I thought it might be a good idea to have a brief summary of the points that differ between sharpening a plane iron and a chisel.

HONE THE FACE SIDE

A plane iron (just like a chisel) can be warped (slightly concave or convex across its width). Also, there's usually a swirl of grooves left by the machining process used to transform a raw chunk of steel into a flat surface, see Photo 1.

If these grooves were to remain on the plane iron, the ridges and valleys would create a "saw-tooth" edge on the cutting edge. So, the first step is to flatten the face side (the flat side) of the plane iron to get a smooth, straight cutting edge.

HONING THE FACE. In the past, I solved both of these problems by honing the face side of the plane iron on a coarse *India* stone. But recently, we bought some of those new diamond stones. These stones have a plastic base with a layer of nickel that's impregnated with tiny bits of diamond dust. (See Shop Notes, page 22, for more on these stones.)

As shown in Figure 1, I position the diamond stone on the bench so it's at a 45° angle to my body. Then the plane iron is placed on the stone so only the last 1" or so (near the cutting edge) is flat on the stone.

To do the honing, apply pressure on the end of the plane iron and simply move it back and forth. All of the pressure from your fingers should be on the tip of the plane iron. The rest of the iron (hanging off the stone) is held loosely in my other hand.

The key thing here is to apply pressure straight down, so you don't drive the leading edge of the iron into the stone and create a rounded surface.

POLISHING THE FACE. Although a diamond stone does a good job of "hogging off" a lot of steel, it leaves a rather rough texture. (Even the "fine" diamond stone is still rather rough compared to the India stones.) To polish off this roughness, I switch to a fine India stone and then polish it on a soft Arkansas stone.

All of this is a lot of work. But the result is the smooth, flat surface shown in Photo 1, above. Once the face side is worked into shape like this, you shouldn't have to worry about it for a long time to come.

GRINDING AND HONING ANGLES

The next step is to grind the beveled side of the plane iron to the proper cutting angle. All plane manufacturers recommend a 25° grinding angle on plane irons. Although this exact angle is not entirely critical, you should be fairly close to 25° (and certainly no more than 30°) to allow "clearance" behind the cutting edge of the plane iron.

This angle has to do with the angle of the plane iron as it's mounted to the frog. On bench planes this angle is 45°. If the plane iron is ground to a 25° angle, you're left with a 20° "clearance" angle behind the cutting edge of the plane iron. If a micro-bevel is honed on the cutting edge of the plane iron, the net effect is a corresponding reduction in the clearance angle.

What all this boils down to is that I tend to stick to the recommended 25° grinding angle. As was mentioned in *Woodsmith* No. 20, I use a Norton 38A, 60-grit grinding wheel to grind both chisels and plane irons. Once the plane iron is hollow-ground to the proper angle (see Fig. 2), the next step is to hone the cutting edge.

HONING THE CUTTING EDGE

There are a lot of ways to hone the cutting edge. In fact, Ted and I have a running debate going as to which way is "best." We get into heated discussions about the "theory" of honing angles, the way the plane iron should be held to achieve those angles, and even the effect these various methods have on the stone.

Although we each have a different method of sharpening, we do agree on one point. No matter what way you choose to hone a plane iron, the whole purpose is to get it sharp.

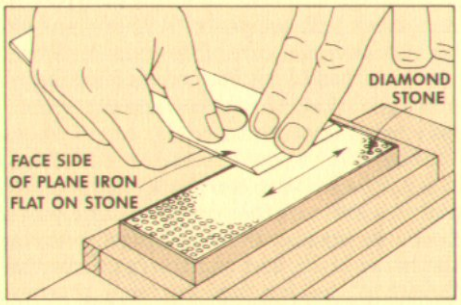

1 *I use a diamond "stone" to hone face side of plane iron. Apply even pressure (almost straight down) at end of iron and hone back and forth until it's flat.*

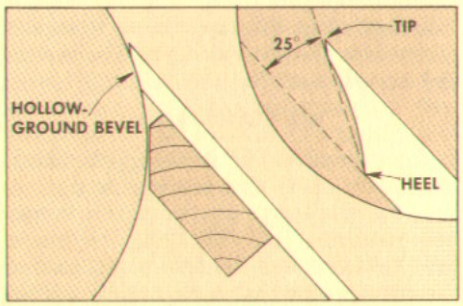

2 *Plane irons should be ground to a 25° cutting angle. The edge will be hollow-ground (slightly concave) but the final angle is measured from tip to heel.*

DON'S METHOD. The method I use is very similar to the one I use to hone a chisel. Basically, I start the honing process on a fine India stone. First, I place the hollow-ground edge on the stone and rock it back and forth until both the heel and point are resting flat on the stone, see Fig. 3.

Then I lift it slightly (probably about 2° or 3°), and move the plane iron in a slight arc, as shown in Fig. 4. I continue honing (it usually only takes 8 to 10 strokes) until I feel an even burr on the face side.

Once the burr is formed, that's as far as you have to go. (Anything more is just an exercise in removing metal.) Next, flip the iron over so the face side of the iron is flat on the stone. Then I pull it toward me to snap off most (if not all) of the burr.

Since the fine India leaves a somewhat rough edge, I take it one step further and polish a micro-bevel on the honed edge using a soft Arkansas stone. The process here is exactly the same as before — move the plane iron in a shallow arc until you feel a slight burr on the face side (usually about 5 or 6 strokes). Then place it flat on the stone and pull it toward you to remove the burr.

REMOVE THE BURR. After this initial polishing process on the soft Arkansas stone, if I can still feel a burr on either the face or beveled side of the plane iron, I simply repeat the polishing process one or two times. Then I remove any traces of the burr by stropping the cutting edge on a leather pad coated with jeweler's rouge. (The result of all this is shown in Photo 2.)

Now here's where Ted and I get into a friendly disagreement. Ted argues that there's no way for me to know if I'm holding the plane iron at exactly the same angle on these successive passes on the India stone, then the soft Arkansas stone, and finally on the stropping pad. Thus, I could be creating a series of micro-bevels, all at slightly different angles.

I agree . . . in theory. But I also think that the micro-bevel is so small that it really doesn't make much difference. Besides, the only way to know for sure if the iron is sharp is to test it out.

But first, Ted's method.

TED'S METHOD

Ted goes about things a little differently. We agree with the method of flattening the face side on a diamond stone. But then Ted likes to use Japanese water stones to hone and polish the roughness left by the diamond stone. (A discussion of these stones is given in Shop Notes, page 22.)

He starts the honing process with a 1000-grit stone and then polishes the surface with a finishing stone. The results are impressive. After the plane iron is polished on a finishing water stone, the surface is so smooth it has an almost mirror finish. (After seeing this finish, I'm about to change my ways, and switch over to the Japanese stones.)

GRINDING AND HONING. Once again, we agree on the procedure for grinding a hollow-ground bevel at a 25° angle to form the cutting edge. From there on, Ted uses a different technique.

He holds the iron with both hands, applying pressure to the very tip of the iron with as many fingers as possible. Then he rocks the hollow-ground bevel back and forth until both the tip and the heel are resting firmly on the stone. (Once again, Ted uses Japanese water stones, starting with the 1000-grit stone.)

Now, instead of lifting the heel of the hollow-ground bevel (as I do), he keeps both heel and tip on the stone and pushes the plane iron forward, refer to Fig. 5.

At the end of the forward stroke, he pauses briefly to make sure both the heel and tip are on the stone, and then pulls the iron back toward him. This action is continued until he feels an even burr on the face side of the plane iron.

REMOVING THE BURR. To remove this burr, Ted takes a much more serious approach than I do. First, he flips the iron over to the face side and hones with the same motion shown in Figure 1. Although most of the burr is removed with this honing, some of it remains, and is actually bent back onto the beveled side of the iron.

Once again, he finds the honing angle by rocking the bevel until both the heel and tip are firmly on the stone. Then he starts the honing process again, but this time just enough to remove the burr.

This is where Ted's method pays off. He knows for sure that on these successive passes he's at the same angle as on the original passes. (This method completely eliminates the possibility of creating a series of micro-bevels as with my method). Then this procedure is repeated until no trace of the burr remains.

The results are shown in Photo 3. This photo also demonstrates a very important aspect of honing a plane iron. You can just barely see a wavy line between the polished surface at the tip and the rough texture left by the grinding wheel. This line is wavy for the simple reason that during the grinding stage it's very difficult to grind a perfectly flat (straight) surface across the width of the iron.

However, as this hollow-ground bevel is honed, the net effect is to straighten the cutting edge across the entire width of the plane iron.

Once this smooth surface appears across the width of the iron, Ted switches to the finishing water stone to polish it (using the same technique described above). After it's polished, he holds the iron in one hand (as shown in Fig. 4) and raises it slightly to put an extremely fine micro-bevel on the tip. This only takes four or five strokes. And with this final flourish, the honing and polishing are complete. Now it's just a matter of testing the results.

TESTING THE SHARPNESS. No matter which method is used to hone the plane iron, there's one good way to test the sharpness. Take the plane iron and pare down on the end grain of a piece of soft pine. If the iron is sharp, it will shave off thin strips of wood, leaving a clean, smooth surface. And if it's really sharp, the end grain will look and feel polished, with no traces of tear-out.

The ultimate test, of course, is to mount the iron in the plane and make some shavings. If you can produce paper thin shavings that are clean and smooth (a dull plane iron will produce "hairy" shavings), then you know the iron is sharp and ready to do its job.

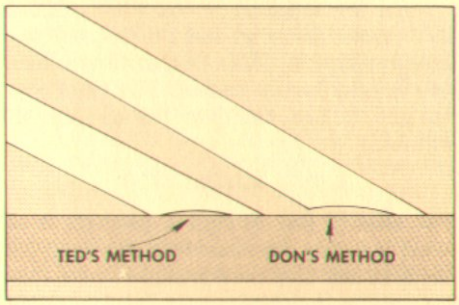

3 *When Ted hones the cutting edge (left), both tip and heel are flat on the stone. I raise the heel just slightly (right) to form a micro-bevel at the tip.*

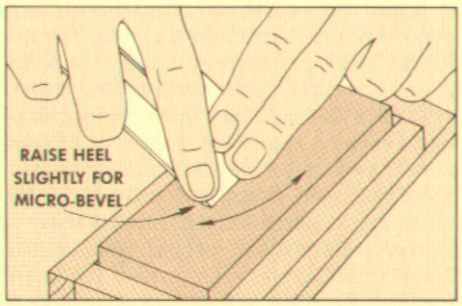

4 *Don's method: I start on an India stone to hone edge (in slight arc) until I feel a burr on the face side. Then I repeat this process on a soft Arkansas stone.*

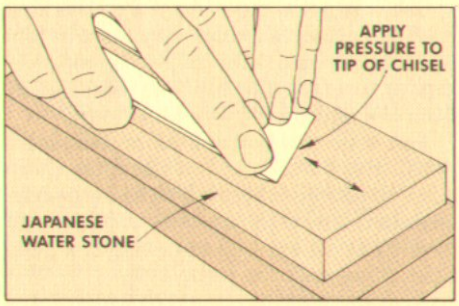

5 *Ted's method: Both heel and tip are flat on Japanese water stone. Move iron forward, pause to check position, then pull back. Repeat on finishing stone.*

Using A Bench Plane

THE ROAD TO PAPER-THIN SHAVINGS

After the plane iron is sharpened to perfection, and all the other parts are adjusted and corrected, the plane can be re-assembled and put to use.

Editor's note: What follows is a rather lengthy discussion of all the adjustments that can be made on a plane. A lot of this may sound like a whole lot of effort that's not really worth it. And to some extent, that's true. You can get a lot of use out of a plane before any of these adjustments are truly critical.

However, somewhere along the way, a combination of necessity and curiosity will probably get the better of you. That's what happened to me. And I finally decided to see just how refined this operation could be.

The first step in re-assembling the parts is to join the cap iron and the plane iron (cutter) with the cap iron screw. Here's where the choices begin.

ADJUSTING THE CAP IRON

For most general-purpose planing, the front edge of the cap iron should be positioned about 1/32" to 1/16" from the very tip of the cutting edge of the plane iron. However, this position can be varied depending on the kind of work you need to do.

If you're working with highly figured wood (where there are frequent changes in the direction of the grain), the plane will have a greater tendency to chatter (and cause "tear-outs"). In this case, it helps to set the cap iron as close to the end of the plane iron as possible.

On the other hand, if you're doing rough work (with a rather deep depth-of-cut), it's better to set the cap iron back a little farther — so it's 1/16" or more from the cutting edge. This extra space permits a little more travel distance for the thick shavings before they're deflected by the nose of the cap iron.

One last point here. As you're working with the plane, shavings may start to jam up in the throat. If this happens, one solution is to move the cap iron back (away from the cutting edge) a little more.

You may also notice a lot of little stuff (small chips and parts of shavings) jamming up *between* the cap iron and the plane iron. In this case the tip of the cap iron may have to be honed smoother to get a good tight fit against the plane iron.

ADJUSTMENTS ON THE PLANE

After the plane iron and cap iron are joined together, this "double iron" assembly can be placed on the frog. For now, the frog screws (that hold the frog to the plane body) should be somewhat loose. Then the lever cap is placed over the "double irons" and clamped down.

Once the plane is assembled, there are three basic adjustments that can be made: adjusting the throat opening, adjusting the lateral position of the plane iron, and the depth-of-cut adjustment.

ADJUSTING THE THROAT

As mentioned above, the frog is only loosely fastened in place. Before the frog screws are tightened, the throat opening should be set. That is, the frog must be moved forward or back to adjust the distance between the front edge of the throat and the cutting edge of the plane iron.

To set the throat, lower the plane iron (using the brass depth adjusting knob) until the cutting edge is level with the sole of the plane. Then flip the plane over to check the distance between the cutting edge and the front edge of the throat.

The adjustment here is much like that of the cap iron — it depends on what kind of planing you want to do. If you're working on highly figured wood, or if you're doing very delicate finish work, the throat should have a narrow opening. And for rough work, the opening should be wider.

Most of these refinements can be made as it becomes necessary. For now, all you have to do is make sure the cutting edge of the plane iron actually fits through the opening in the sole of the plane, and there's a reasonable amount of clearance in the throat opening.

If the plane has a frog adjusting screw (located just beneath the brass knob), just turn it to move the frog forward or backward. If there is no adjusting screw, push the frog around with your fingers until you get the opening you want. Either way it's done, make sure the cutting edge of the plane iron is parallel with the front edge of the throat.

When you've got it positioned where you want it, carefully remove the lever cap and the double irons and tighten the frog screws. Then put everything back in place.

LATERAL ADJUSTMENT

Next, the cutting edge of the plane iron must be adjusted so it's parallel with the sole of the plane. This is a sighting adjustment and tough to make because it's only as good as your "eye." (Which in my case tends to be a tad on the blurry side.)

Lower the plane iron until the cutting edge is sticking out a fraction of an inch below the sole of the plane. Then hold the plane up-side down and "aim" it toward a light, reflective surface (a piece of white cardboard, or a fluorescent light).

As you sight down the sole, the cutting edge of the plane iron should appear as a thick dark line. All you have to do is move the lateral adjusting level until the dark line is even across the width of the plane.

Since this adjustment must be accurate to thousandths of an inch, it helps if you keep raising the plane iron until the dark line is just barely visible. The finer you can get the line, the finer the adjustment will be.

DEPTH ADJUSTMENT

The easiest way to ruin a good piece of wood is to set the plane iron too deep for the first cut. I've read in some books that you set the depth of cut by sighting down the sole and adjusting the plane iron to the depth you want — just like sighting for the lateral adjustment.

With all due respect, I think this is

ridiculous. The difference between a "thin" shaving and a "thick" shaving is only a few thousandths of an inch. My eye is just not good enough to make such fine adjustments.

SETTING THE DEPTH. I start with a very fine cut. In fact, I start with no cut at all. The cutting edge of the plane iron is set completely *above* the sole of the plane.

Then I slowly lower the plane iron . . . just a little at a time. With each small turn of the brass knob, I make a pass over the board until the cutting edge starts to make a shaving. This way I can sneak up on the depth of cut I want, without ruining the board with the very first pass.

But there's another reason for this approach. As mentioned in the article on page 16, there's some amount of "play" in the depth adjusting mechanism.

To compensate for this play, the depth adjusting knob should be on a forward movement (moving the plane iron down), and not on a "backing off" movement. This way the "Y" yoke is exerting pressure on the plane iron and it stays put.

PUTTING IT TO USE

The ultimate test for all of this adjusting is to make some shavings. By taking a few strokes on a piece of scrap wood you should know very quickly what problems there are and if any further adjustments need to be made. These first few strokes will also give you a pretty good idea of the body motion that's required.

At first there may be a tendency to use a plane with your arms only. (This looks like someone scrubbing clothes on an old washboard.) Instead, you have to get your whole body involved.

I stand with my left foot forward and most of the weight of my body on my right foot. Then I hold the plane any way that seems comfortable, as long as I've got a good grip on it.

For the initial part of the stroke just shift the weight from your right foot to your left foot. Carry through with your shoulders and then with your arms to complete the stroke.

The body movement here is very similar to those karate experts you see on T.V. — the ones who split a board with their fists. Start with a gentle lunging motion (with your body), and then a good follow-through (with your arm).

This motion should be neither quick nor slow. What you want to do is gauge the force behind the initial stroke so you're sure you can complete the cut (for the length of the board) in one pass.

What about the pressure on the plane as you begin and end the cut?

Most of the books I've read say that you should put pressure on the front of the plane (the front knob) as you begin the cut, and then transfer the pressure to the back handle as you end the cut. This is technically correct. But if you actually try to move the plane this way, you'll probably "die out" before you get to the end of the board.

I approach it a little differently. First, I have it in my mind that I'm going to make one smooth, continuous stroke all the way to the end of the board. (A nice fluid body and arm movement.)

Then, instead of worrying about the beginning or end of the stroke, I concentrate on the middle. After the stroke has begun, I bear down on the plane as it's in the middle of the board. It's almost like trying to hollow out the center of the board. The sole of the plane won't allow you to actually hollow-out the board. But thinking this way puts my attention on the longest part of the stroke, instead of just the beginning and end.

Aren't you supposed to lift up the plane on the return stroke so you're not dragging the plane iron over the surface?

Once again, I've read that this is the "correct" procedure. I think the reason is to prevent wear and tear on the plane iron so it doesn't get dull.

But this practice seems very awkward to me. And I think it breaks the rhythm of planing. Instead, I just ease up on the plane and drag it back. As for dulling the plane iron, I don't think it really makes much difference. If anything, dragging the plane probably helps the cutting edge last longer. In effect, you're stropping the cutting edge on the wood.

PLANING A TABLE TOP

At this point the plane is really doing its job. And now I'm supposed to talk about how to plane a board — or more properly, how to true a board with a plane.

This is a nice exercise, but it's rarely needed in woodworking today. Most of the lumber we use is already surfaced when we buy it. Then, once the edges are ripped square, the board is very close to being true.

Besides, the vast majority of the time, a plane is used to true a large surface — one that's been glued up of several boards. I really don't see much point in truing each board, then gluing several boards together. And then having to true the whole surface all over again.

ROUGHING DOWN. If you're working with a large surface (a table top, for example), that's been glued-up of several boards, the first step is to rough it down. No matter how careful I am when gluing-up the boards, there's always some variation at the joint lines. So the planing begins by smoothing down this surface to get all the boards at the same level.

This initial planing is done *across* the grain of the wood. (I use a jack plane for all this initial work.) The technique here is nothing fancy. I just start at one end of the surface and plane directly across the grain. If, during the initial passes, the plane starts tearing out in some areas, you can change the angle of attack so you're at something more like a 45° angle.

The important thing, however, is to start with a shallow depth-of-cut. Don't try to take all the wood off at once. Just keep going with fairly light passes until all the joint lines are knocked off.

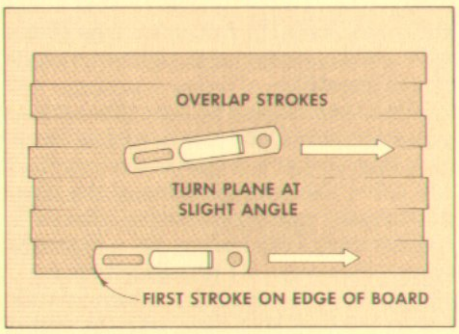

SMOOTHING THE SURFACE. When the surface is fairly flat, I start planing along the length of the boards. The first stroke is made with plane going in straight line — parallel to this edge, see Fig. 1. (I'm right-handed so I start on the right edge of the board.)

Once again, the depth of cut should be fairly light. All of the first passes across the surface will simply be skimming off the high spots. It's not uncommon for the plane to cut for a while, and then skip over some areas (the low spots).

After the initial stroke along the edge, I turn the plane to a slight angle but still move it parallel to the edge. This, in effect, makes the plane very wide and gives you the best chance for leveling the entire surface, see Fig. 2.

From here on, it's just a matter of work (fun). Just keep moving the plane across the surface with overlapping strokes. Then go back to the right edge and make another series of passes.

After I've had enough fun for awhile, I check the surface with straight edge. (Here it helps to put a bright light at the end of the surface so it's easier to see the low spots). When the surface is just about perfect, I re-set the plane iron for a very thin cut and make one last series of passes over the entire surface.

FINISHING. No matter how hard I try, the plane is bound to leave little ridges every once in a while. To remove these (and to go over areas with "wild" grain), I use a scraper blade for the final finishing. (See *Woodsmith* No. 15 for more on scraper blades.)

One last thought. All of this sounds like a lot of work. But it's also a lot of fun. And in the end, there's no greater thrill than to run your fingers over a perfectly smooth surface that's been planed by hand.

Shop Notes

SOME TIPS FROM OUR SHOP

FLATTENING A PLANE

When you buy a new plane, it's reasonable to expect that the sole of the plane is perfectly flat. Unfortunately, that's not always the case. In fact, most new planes have a little problem area right around the throat (mouth).

This area is critical because that's where all the action is. If the sole is warped (forming a high spot or low spot at the throat), it will affect the cutting action of the plane iron (usually causing excessive "chatter").

HIGH SPOT. If the plane has a high spot around the throat, it's usually not too much of a problem because all you have to do is flatten the high spot flush with the rest of the sole. This is relatively easy to do by "sanding" the bottom of the plane on some silicon carbide paper.

Tape a sheet of 220-grit silicon carbide paper to the table of the table saw and take a few careful strokes. The high spots should become quite visible as shiny areas.

Keep working the plane over the paper until these areas are flush with the rest of the sole. Then switch to 320 and finally 400-grit paper to smooth out the sanding marks.

LOW SPOT. If the sole has a low spot at the throat, it's more of a challenge. You have to flatten the entire sole of the plane to get this area flush. This is too much work for sandpaper, but it can be done with silicon carbide "slurry."

This slurry is made with powdered silicon carbide powder mixed with enough water to form a thin paste. I start with 80 grit silicon carbide powder, and work to finer grits as the sole is flattened. (Note: Silicon carbide powder is available at lapidary supply stores. Look in the Yellow Pages under Lapidary.)

Although the slurry does a terrific job of cutting steel, the problem is finding a flat surface to work on. What I wound up using was a cement block. Or to be more precise, two cement patio blocks. (These are 1½" thick blocks, about 8" wide by 15½" long.)

The surfaces of these blocks are almost (but not quite) flat. So first I had to flatten them. I smeared a little slurry on the two blocks, and simply rubbed the blocks together until the surfaces were flat.

Then I cleaned off the blocks and mixed up a fresh batch of slurry to flatten the plane bottom. All you have to do is rub the plane over the cement block and the slurry to smooth out the sole.

This will cut the steel sole of a plane quite rapidly, but it also tends to remove the cement. In order to prevent a dished-out block, move the plane evenly over the entire surface of the block. Once the sole is flat, switch to silicon carbide paper (as described above) to polish it smooth.

GRAIN DIRECTION

There's a lot of controversy concerning how to lay out boards that are going to be glued together. Some say you should alternate the grain (as seen from the ends of the boards) so one board is "up" and the next "down", etc. Others say you should put "new growth" against "old growth."

I can't really dispute any of these approaches. But I go about it differently. Two things are important to me: 1) The grain pattern of the finished piece should be pleasing, even if it's not "technically" correct. And 2), it's more important to me that the boards are laid out so the grain is going in the proper direction for planing, not necessarily for gluing.

(I should add here that we've followed this approach with all of the projects shown in *Woodsmith*, and haven't had any problems.)

Laying out the boards so they can be planed easily is a step that's rarely mentioned (and often forgotten). But if the boards are not going in the "right" direction for planing, you'll be faced with a lot of tear-out problems.

There's also a misconception about how to determine the proper grain direction for planing. When looking at the face side of a board, the grain usually forms a series of "V" patterns that "point" in one direction. There's a natural tendency to want to move the plane in that direction — "with the grain."

However, the only way to tell if the grain is going in the right direction on the *face* of the board is to look at the grain on the *edge* of the board.

If you're lucky, the grain lines on the edge will gently curve to one face or the other for the entire length of the board. When gluing up a set of these boards, try to get all of them arranged so the grain curves to the same side of the final glued-up surface.

However, sometimes the grain pattern on the edge is wavy — it switches back and forth, usually where a knot is forming. When confronted with this situation, I try to make a democratic decision: the majority of the grain pattern wins. That is, I try to arrange the boards so the majority of the grain is going in one direction to reduce the tear-out problems.

In those areas where you do have problems, you may have to plane from two directions, or you can use a scraper blade (see *Woodsmith* No. 15).

USING SPLINES

Although I will admit that I enjoy working with hand planes, I try to cut down on a lot of unnecessary work by getting the surface of the glued-up boards as flat as possible before the planing ever begins.

If I'm gluing up several narrow boards to form a rather large surface, I cut grooves on edges of each board for splines.

Although splines add some strength to the joint, their real purpose is to align the top faces of all the boards — to get the surface of the glued-up boards as flat as possible right from the start. This makes the planing operation much easier.

However, the critical thing here is to cut the grooves so they're all exactly the same distance from the face side (the top side) of the boards. To do this, place the face side (the top side) of each board against the fence of the table saw and cut the groove on one edge. Then "cartwheel" the board (flip it end-for-end) so the same face is still against the fence, and cut a groove on the other edge of the board.

When the splines are inserted in these grooves, the top faces of all the boards will be flush, even though the bottoms may vary depending on the thickness of each board, see drawing above.

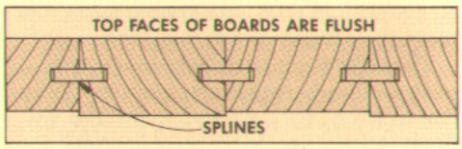

As for the splines themselves, I usually use plain old ⅛" Masonite. It's cheap, and it always seems to fit the groove by saw blade cuts.

SHARPENING STONES

I thought there would be enough room on this page to get into a discussion of the two new stones we used to sharpen plane (the diamond stone and the Japanese water stones). But we ran out of space. We'll cover these stones in a full article in the next issue.

Talking Shop

AN OPEN FORUM FOR QUESTIONS AND COMMENTS

A NEW ADJUSTABLE DADO

I received an interesting call the other day from one of our subscribers about a problem he was having with *Freud's* new 8" adjustable dado blade. (The old 6" model we reviewed in *Woodsmith* No. 17 has been discontinued.)

The problem was that when he tried to put the new blade on his 10" table saw, he couldn't thread the arbor nut because the arbor didn't even extend beyond the thickness of the blade housing.

This was quite a surprise. It seemed incredible that *Freud* would change the design of their new dado to the point that it wouldn't fit on a 10" table saw. So we decided to call *Freud* to find out what was up.

We were told that the first several shipments of the new 8" dado blade actually did have a design error that prevented them from fitting on a 10" table saw. Evidently, the problem was just an oversight during the process of redesigning the adjusting mechanism for the new 8" model. Unfortunately, no one caught the oversight before the first shipments of the new dados were sent out.

Needless to say, it didn't take long before they found out about the mistake. According to *Freud*, as soon as the problem was discovered, they recalled the dados immediately.

To eliminate the problem, they're milling down the sides of the new adjusting mechanism to reduce the thickness at the arbor hole so that they'll fit on any 10" table saw.

If you bought one of the faulty 8" models, you can exchange it (at any *Freud* dealer) for the new, corrected model.

There are some other (correct) changes in the new 8" dado that makes it quite a bit different than the original 6" model. First of all, they changed the actual blade of the dado. The original 6" model had a blade with only 8 carbide tipped teeth. The blade on the new model has been armed with 24 carbide tipped teeth, which is quite an improvement.

Another nice change on the new model is a wider range of width adjustments (⅛" - 15/16").

The rest of the changes on the new dado are really a bag of mixed blessings. On this plus side, the new 8" dado is priced the same as the discontinued 6" model, $59.90.

But as with everything else, you get what you pay for. And in order to keep the cost of the new 8" dado the same as the discontinued 6" model, they elimianted the extra step it took to grind the teeth of the blade so that they'd cut a dado with a convex bottom.

Unfortunately, this was one of the main reasons we were so impressed with the old 6" model. (If you've ever tried to pare down the outside corners of a concave dado, I'm sure you know why we got excited about the convex cut.) And after using the old model for over a year and a half, we thought that elimianting this feature just to keep from raising the price was a pretty poor trade-off.

Evidently, *Freud* agrees. In fact, they're going to change back to the original grind that produced the convex bottomed dado. These new models will be available starting sometime around the first of the year. At that time, there will also be a price increase (of about $20.00) due to the extra manufacturing step to grind the teeth.

I think when this new dado is available, it will be well worth looking into.

RAISED PANEL ROUTER BITS

I've been looking for router bits that can be used for raised-panel doors. Do you know of any sources for these bits?

Gary Paris
Farmville, Virginia

Generally speaking, router bits are not available in sizes large enough to be used for raised panels. However, after looking through several catalogs, I found two bits that are made specifically for raised panels. Unfortunately, they're as expensive as they are rare; and they require a rather hefty (commercial) router that will accept a ½" shank.

The first bit produces a panel with a straight bevel that's approximately ⅝" wide. This bit sells for $59.80. The second bit is an ogee fillet raised panel bit that cuts a profile approximately 1" in width. This bit sells for whopping $136.90.

Both of these bits are available from *Highland Hardware*, 1034 N. Highland Ave. NE, Atlanta, GA 30306, Cat. $1.00. They are also available from *Garrett Wade*, 161 Ave. of the Americas, N.Y., N.Y., 10013. Catalog: $3.00.

GRINDING WHEEL SOURCES

I've tried to find a source for the *Norton* grinding wheel you recommend in *Woodsmith* No. 20, without any success.

Could you possibly give me a source for the grinding wheel you recommended that has a ½" arbor hole?

Ken Strei
Cedar Park, Texas

The only mail order source we know of for the aluminum oxide grinding wheels recommended in our article is *Woodcraft Supply*. (These grinding wheels are made by *Bay State Abrasives*, but they're very similar to the *Norton* wheels.)

The 6" diameter aluminum oxide wheels offered by *Woodcraft* all have ¾" arbor holes. If your grinder has a ½" arbor, you'll have to use a bushing to reduce the ¾" diameter to ½".

Both the bushings and the wheels can be ordered from *Woodcraft Supply*. Their new address is: 41 Atlantic Ave., Woburn, MA 01888. Catalog: $2.50.

CARBIDE ROUTER BITS

In *Woodsmith* No. 21, you mentioned that you used a ⅛" carbide-tipped straight router bit to rout spline grooves.

After looking in all of my mail order catalogs, and checking with the local suppliers, I've been unable to locate a source for a ⅛" carbide-tipped bit anywhere. Can you provide me with a mail order source?

Duncan G. Graham M.D.
Mesa, Arizona

The ⅛" carbide-tipped router bit we use is made by *Porter Cable (Rockwell)*. We purchased it at a local hardware store (that sells *Porter Cable* power hand tools), and didn't realize that there would be a problem obtaining one.

The only ⅛" carbide bit that we can find that's available mail order is manufactured by *Freud*. It can be ordered from *Highland Hardware*, Stock # 10.20.02, price $10.60 plus $1.50 for shipping charges. Their address is listed above.

Another source for a ⅛" high-speed steel router bit (not carbide-tipped) is *Sears*. The stock number of their ⅛" bit is 9-GT-2552, $2.09. They also have the 1/16" high-speed steel bit that we used on the end caps of the trestle table. It's stock number is 9-GT-25528, and it cost $1.89.

Editor's Note: Recently, both *Rockwell* and *Stanley* power hand tools have undergone some name changes. Their new names are *Bosch* (formerly *Stanley*), and *Porter Cable* (formerly *Rockwell*). From now on we'll be using their new names whenever we refer to their products.

Trestle Bench

THE PERFECT PARTNER FOR A TRESTLE TABLE

This bench is a nice companion piece for the Trestle Table in this issue; and it's also a good "warm-up" project. (Things always seem to go easier the second time around.) The same method of construction is used on this bench as on the table, with only minor differences.

THE SEAT. The assembly of the top (seat) is the same. Glue up of enough boards to get rough dimensions of 14" wide by 48" long. Then trim the ends square to a final length of 47½" and cut the tongues (¾" long this time) on each end.

Next, the side thicknesser strips are glued to the edges, and the end thicknesser strips are mounted with the slotted screw method. To complete the top, the end caps are cut and mounted.

THE TRESTLES. However, the trestle assemblies on this bench are slightly different than the table. First, the notches (mortises) in the three-board assemblies for the arms and bases are cut to allow for only a single-thickness rail (13/16").

Second, the arms on the bench trestles are long enough to be mounted directly to the side thicknesser strips, which means their overall length is 12" — only 2" less than the width of the seat. Also, in order to provide a little more leverage for the bases, we made them the full width of the top (14" long).

And third, all four of these pieces are tapered, but this time the taper starts ¾" down from the top edge, and ends ½" from the mortise. For the arms this means a 13° taper, and for the bases it's a 10° taper.

THE LEGS. The legs (uprights) are made exactly the same way as on the table — glue up three boards, trim the face sides to allow for a chamfer on the edges of the base and arm, and finally, counterbore the holes for the carriage to hold the rails in place.

THE RAIL. The rail has to be cut to final length so when it's mounted, the trestles of the bench fit comfortably between the trestles on the table. Then to mount the seat, drill holes in the side thicknessers (of the seat) for rosan inserts, and counterbore holes in the trestle arms for ¼" hex-head bolts.
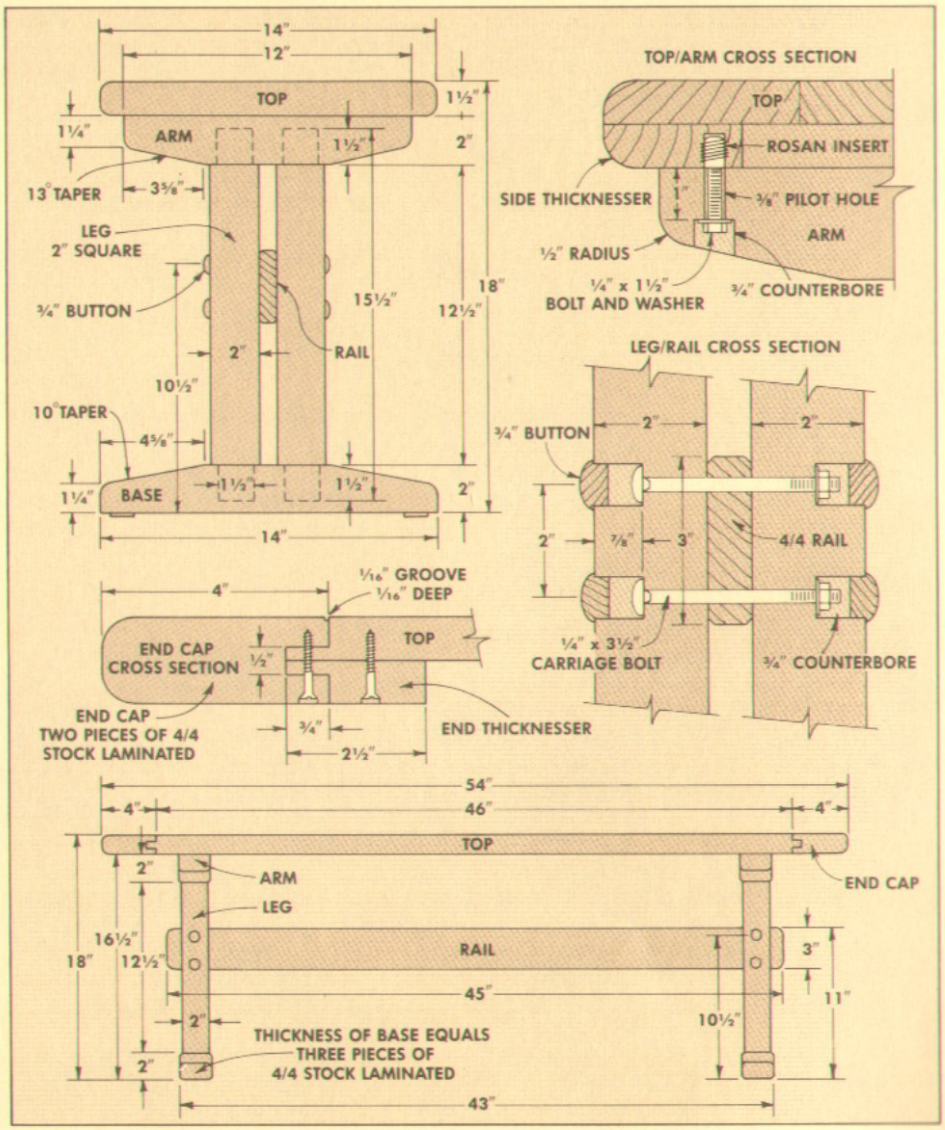
I found it much easier to finish sand all of these pieces (the arms, bases, legs, and the rail) before the trestles are glued up. And then before final assembly of rail and seat, I finished all the pieces with Minwax polyurethane. I also mounted adjustable leveling pads to the bottoms of the trestle bases to allow for variations in the floor. (I figured it had to be the floor that caused the slight wobble.)